Revision History

SCHEMATIC MCN	HW VERSION	REVISION	DESCRIPTION OF CHANGE
K3	EVT1.0	A	PRELIMINARY VERSION RELEASE

REVISION RECORD			
LTR	ECO NO:	APPROVED:	DATE:

DRAWN: Jimmy(BB), Yue Peng(RF)	DATED: 2016/10/06	COMPANY: HQ	
CHECKED: Yang Junli(BB),Zhang Ruofeng(RF)	DATED: 2016/10/10	TITLE: D52_MB_SCH_V1.0_161110	
QUALITY CONTROL:	DATED:	CODE:	SIZE: D / DRAWING NO: / REV: V1.0
RELEASED:	DATED:	SCALE: <Scale>	SHEET: 1 OF 38

REVISION RECORD			
LTR	ECO NO:	APPROVED:	DATE:

DRAWN: Jimmy(BB), Yue Peng(RF)	DATED: 2016/10/06
CHECKED: ang Junli(BB),Zhang Ruofeng(RF)	DATED: 2016/10/10
QUALITY CONTROL:	DATED:
RELEASED:	DATED:

COMPANY: HQ

TITLE: D52_MB_SCH_V1.0_161110

CODE:	SIZE:	DRAWING NO:	REV:
	D		V1.0

SCALE:

SHEET: 2 OF 38

REVISION RECORD			
LTR	ECO NO:	APPROVED:	DATE:

MSM8952 GPIO Configuration For QRD8952

GPIO_0	LCD_RST_N	GPIO_41	NC	GPIO_82	FM_DATA
GPIO_1	NC	GPIO_42	ACCL_INT1_N	GPIO_83	BT_CTL
GPIO_2	AUDIO_SWITCH_EN	GPIO_43	ALSP_INT_N	GPIO_84	BT_DATA
GPIO_3	NC	GPIO_44	NC	GPIO_85	KEY_VOL_UP_N
GPIO_4	UART_MSM_TX	GPIO_45	GYRO_INT_N	GPIO_86	NC
GPIO_5	UART_MSM_RX	GPIO_46	HALL_INT_N	GPIO_87	NC
GPIO_6	WSA_I2C_SDA	GPIO_47	NC	GPIO_88	NC
GPIO_7	WSA_I2C_SCL	GPIO_48	FP_INT_N	GPIO_89	NC
GPIO_8	NC	GPIO_49	UIM_BATT_ALM	GPIO_90	NC
GPIO_9	WSA_WCD_INTR	GPIO_50	FORCE_USB_BOOT	GPIO_91	NC
GPIO_10	TP_I2C_SDA	GPIO_51	UIM1_DATA	GPIO_92	NC
GPIO_11	TP_I2C_SCL	GPIO_52	UIM1_CLK	GPIO_93	KEY_HOME
GPIO_12	NFC_PWR_REQ	GPIO_53	UIM1_RESET	GPIO_94	WSA_IO_DATA
GPIO_13	MCAM2_ID	GPIO_54	UIM1_PRESENT	GPIO_95	WSA_IO_CLK
GPIO_14	SENSOR_I2C_SDA	GPIO_55	UIM2_DATA	GPIO_96	NFC_SPI_ESE_MOSI
GPIO_15	SENSOR_I2C_SCL	GPIO_56	UIM2_CLK	GPIO_97	NFC_SPI_ESE_MISO
GPIO_16	NFC_DISABLE	GPIO_57	UIM2_RESET	GPIO_98	NFC_SPI_ESE_SS
GPIO_17	NFC_IRQ	GPIO_58	UIM2_PRESENT	GPIO_99	NFC_SPI_ESE_CLK
GPIO_18	NFC_I2C_SDA	GPIO_59	LCD_ID0	GPIO_100	GRFC0_SEL
GPIO_19	NFC_I2C_SCL	GPIO_60	MCAM1_ID	GPIO_101	GRFC1_SEL
GPIO_20	FP_SPI_MOSI	GPIO_61	NC	GPIO_102	GRFC2_SEL
GPIO_21	FP_SPI_MISO	GPIO_62	FP_RST_N	GPIO_103	GRFC3_SEL
GPIO_22	FP_SPI_CS	GPIO_63	NC	GPIO_104	GRFC4_SEL
GPIO_23	FP_SPI_CLK	GPIO_64	TP_RST_N	GPIO_105	GRFC5_SEL
GPIO_24	LCD_TE	GPIO_65	TP_INT_N	GPIO_106	GRFC6_SEL
GPIO_25	WSA_MCLK	GPIO_66	GP_PDM_A0	GPIO_107	GRFC7_SEL
GPIO_26	CAM_MCLK0	GPIO_67	SDCARD_DET_N	GPIO_108	GRFC8_SEL
GPIO_27	CAM_MCLK1	GPIO_68	WSA_EN	GPIO_109	NC
GPIO_28	CAM_MCLK2	GPIO_69	CDC_PDM_CLK	GPIO_110	NC
GPIO_29	CAM_I2C_SDA0	GPIO_70	CDC_PDM_SYNC	GPIO_111	GRFC11_SEL
GPIO_30	CAM_I2C_SCL0	GPIO_71	CDC_PDM_TX	GPIO_112	NC
GPIO_31	CAM_I2C_SDA1	GPIO_72	CDC_PDM_RX0	GPIO_113	GRFC13_SEL
GPIO_32	CAM_I2C_SDA1	GPIO_73	CDC_PDM_RX1	GPIO_114	NC
GPIO_33	NC	GPIO_74	CDC_PDM_RX2	GPIO_115	NC
GPIO_34	FLASH_STROBE_NOW	GPIO_75	BT_SSBI	GPIO_116	EXT_GPS_LNA_EN
GPIO_35	MCAM1_PWDN	GPIO_76	WL_CMD_DATA_2	GPIO_117	CH0_GSM_TX_PHASE_D0
GPIO_36	MCAM1_RST_N	GPIO_77	WL_CMD_DATA_1	GPIO_118	RFFE1_CLK
GPIO_37	MCAM2_PWDN	GPIO_78	WL_CMD_DATA_0	GPIO_119	RFFE1_DATA
GPIO_38	MCAM2_RST_N	GPIO_79	WL_CMD_SET	GPIO_120	RFFE2_CLK
GPIO_39	SCAM_PWDN	GPIO_80	WL_CMD_CLK	GPIO_121	RFFE2_DATA
GPIO_40	SCAM_RST_N	GPIO_81	FM_SSBI	GPIO_122	RFFE4_CLK

GPIO_123	RFFE4_DATA
GPIO_124	RFFE5_CLK
GPIO_125	RFFE5_DATA
GPIO_126	NC
GPIO_127	NC
GPIO_128	SCAM_ID
GPIO_129	NFC_FWDL_REQ
GPIO_130	NC
GPIO_131	NC
GPIO_132	MAG_RST_N
GPIO_133	REAR_CAMERA_LDO_EN

PMI8952 GPIO/MPP Configuration For QRD8952

GPIO_1	NC	MPP_1	NC
GPIO_2	NC	MPP_2	GREEN_LED
		MPP_3	NC
		MPP_4	FLASH_STROBE_NOW

PM8952 GPIO/MPP Configuration For QRD8952

GPIO_1	NC	MPP_1	VDD_PX_BIAS_MPP_1
GPIO_2	NC	MPP_2	PA_THERM1
GPIO_3	UIM_BATT_ALM	MPP_3	VREF_DAC_MPP_3
GPIO_4	NC	MPP_4	BOARD_THERM
GPIO_5	NFC_CLK_REQ		
GPIO_6	NC		
GPIO_7	NC		
GPIO_8	NC		

DRAWN: Jimmy(BB), Yue Peng(RF)	DATED: 2016/10/06
CHECKED: Yang Junli(BB),Zhang Ruofeng(RF)	DATED: 2016/10/10
QUALITY CONTROL:	DATED:
RELEASED:	DATED:

COMPANY: HQ

TITLE: D52_MB_SCH_V1.0_161110

CODE:	SIZE:	DRAWING NO:	REV:
	D		V1.0

SCALE:

SHEET: 3 OF 38

MSM8937 Control & EBI

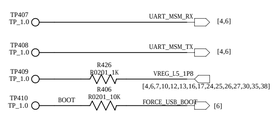

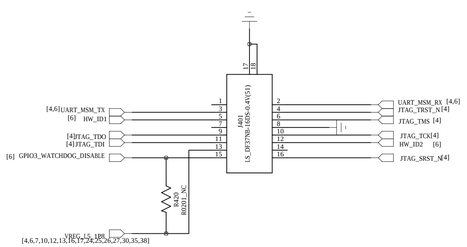

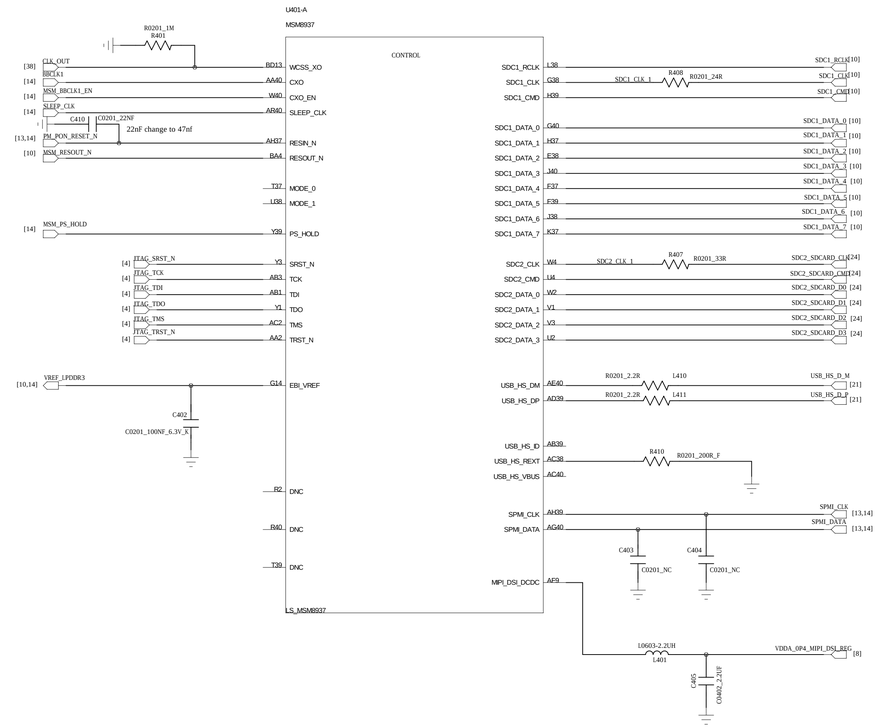

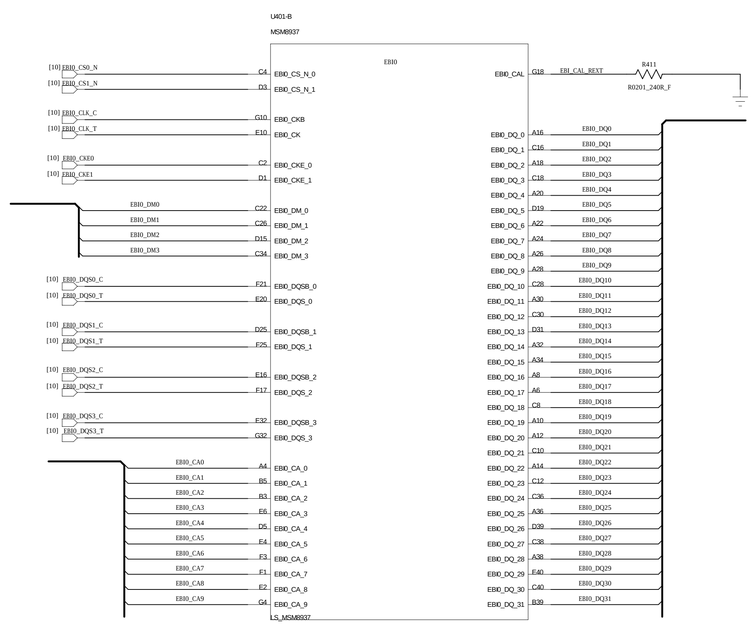

REVISION RECORD			
LTR	ECO NO:	APPROVED:	DATE:

DRAWN: Jimmy(BB), Yue Peng(RF)	DATED: 2016/10/06	COMPANY: HQ	
CHECKED: Xiang Junli(BB),Zhang Ruofeng(RF)	DATED: 2016/10/10	TITLE: D52_MB_SCH_V1.0_161110	
QUALITY CONTROL:	DATED:	CODE: / SIZE: D / DRAWING NO:	REV: V1.0
RELEASED:	DATED:	SCALE:	SHEET: 4 OF 38

REVISION RECORD			
LTR	ECO NO:	APPROVED:	DATE:

MSM8937 MIPI and RF Control

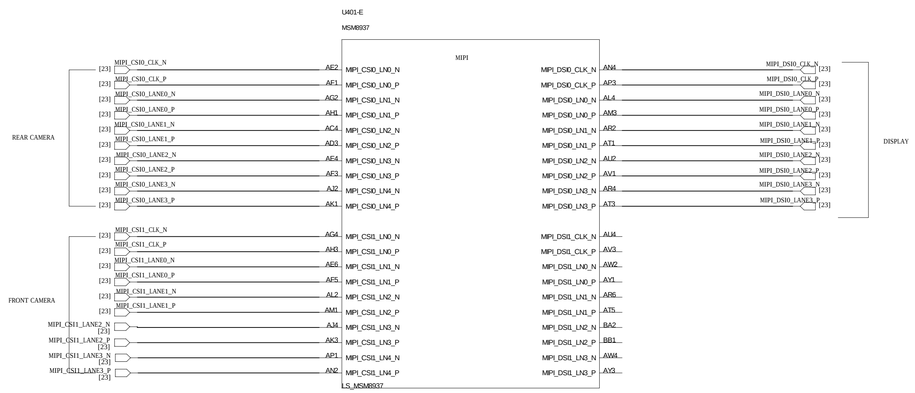

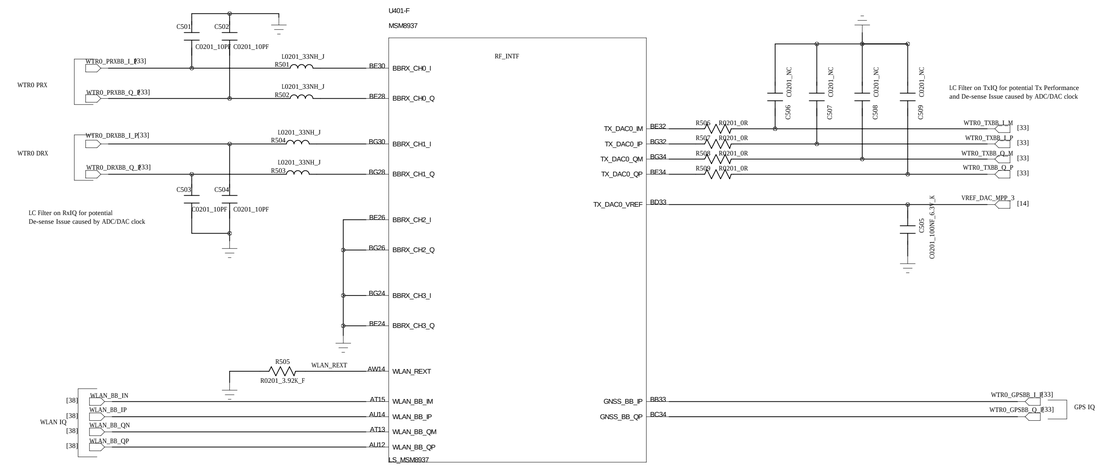

DRAWN: Jimmy(BB), Yue Peng(RF)	DATED: 2016/10/06	COMPANY: HQ			
CHECKED: Xang Junli(BB),Zhang Ruofeng(RF)	DATED: 2016/10/10	TITLE: D52_MB_SCH_V1.0_161110			
QUALITY CONTROL:	DATED:	CODE:	SIZE: D	DRAWING NO:	REV: V1.0
RELEASED:	DATED:	SCALE:		SHEET: 5 OF 38	

REVISION RECORD			
LTR	ECO NO:	APPROVED:	DATE:

MSM8937 GPIO

Note: Asterisks (*) indicate modem power management (MPM) wake-up pins

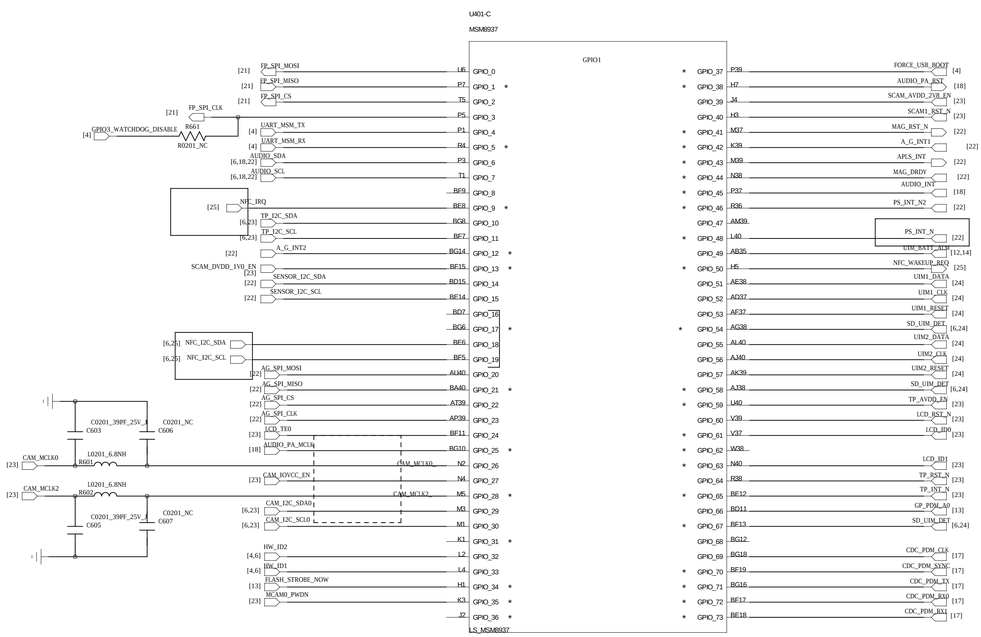

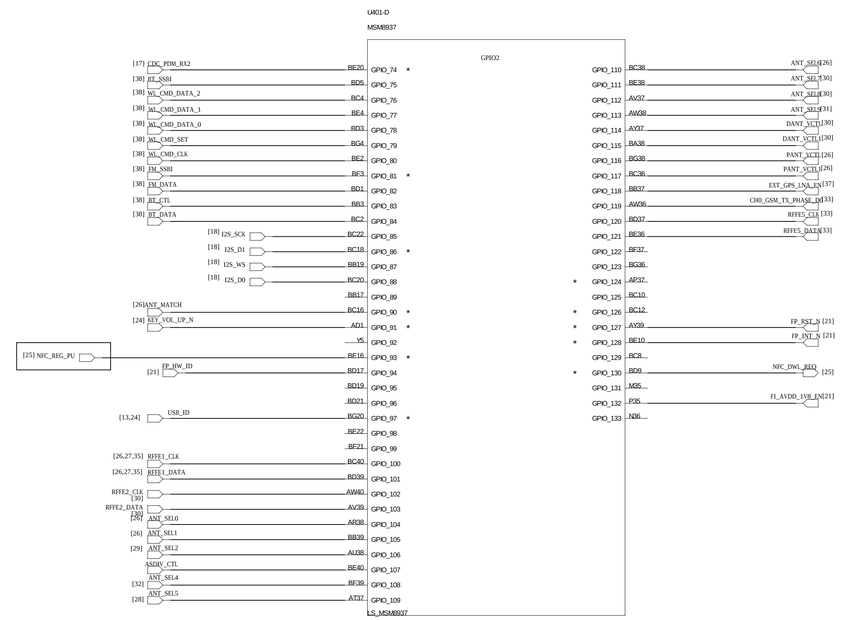

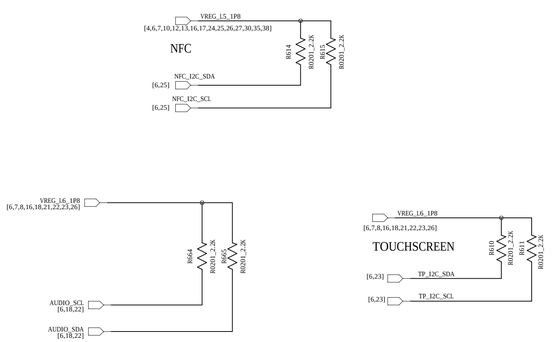

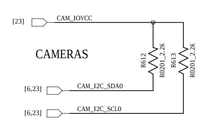

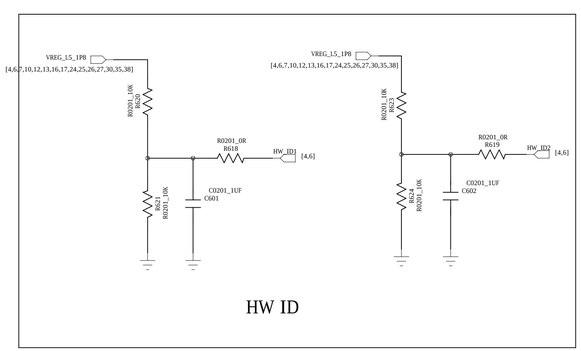

DRAWN: Jimmy(BB), Yue Peng(RF)	DATED: 2016/10/06	COMPANY: HQ		
CHECKED: Yang Junli(BB),Zhang Ruofeng(RF)	DATED: 2016/10/10	TITLE: D52_MB_SCH_V1.0_161110		
QUALITY CONTROL:	DATED:	CODE:	SIZE: D	DRAWING NO: / REV: V1.0
RELEASED:	DATED:	SCALE:	SHEET: 6 OF 38	

REVISION RECORD			
ITR	ECO NO:	APPROVED:	DATE:

MSM8937 POWER1

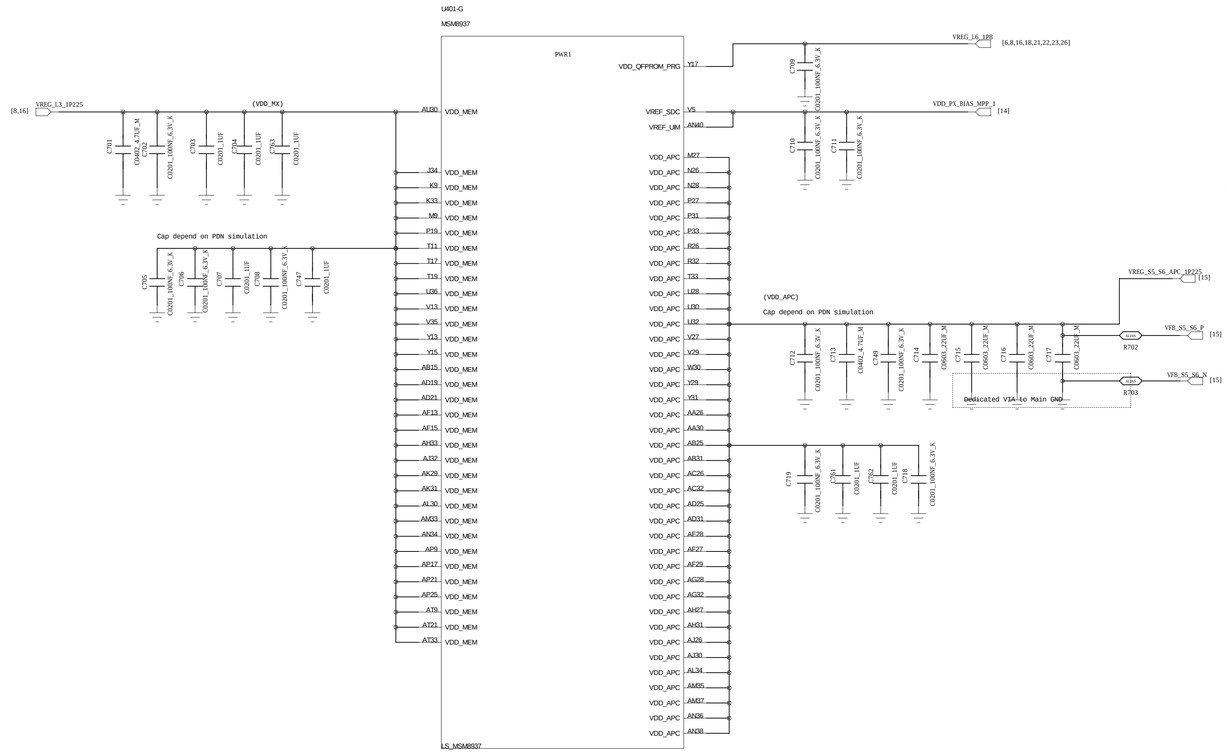

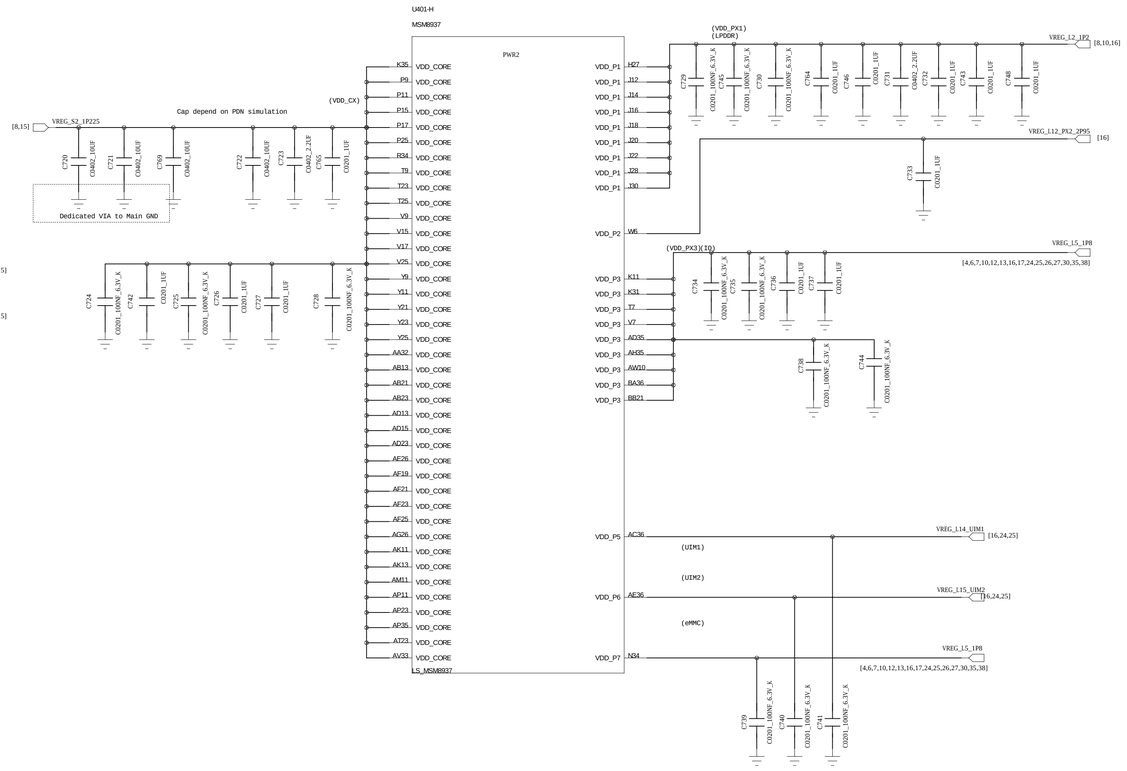

DRAWN: Jimmy(BB), Yue Peng(RF)	DATED: 2016/10/06	COMPANY: HQ	
CHECKED: Yang Junli(BB),Zhang Ruofeng(RF)	DATED: 2016/10/10	TITLE: D52_MB_SCH_V1.0_161110	
QUALITY CONTROL:	DATED:	CODE:	SIZE: D / DRAWING NO: / REV: V1.0
RELEASED:	DATED:	SCALE:	SHEET: 7 OF 38

REVISION RECORD			
LTR	ECO NO:	APPROVED:	DATE:

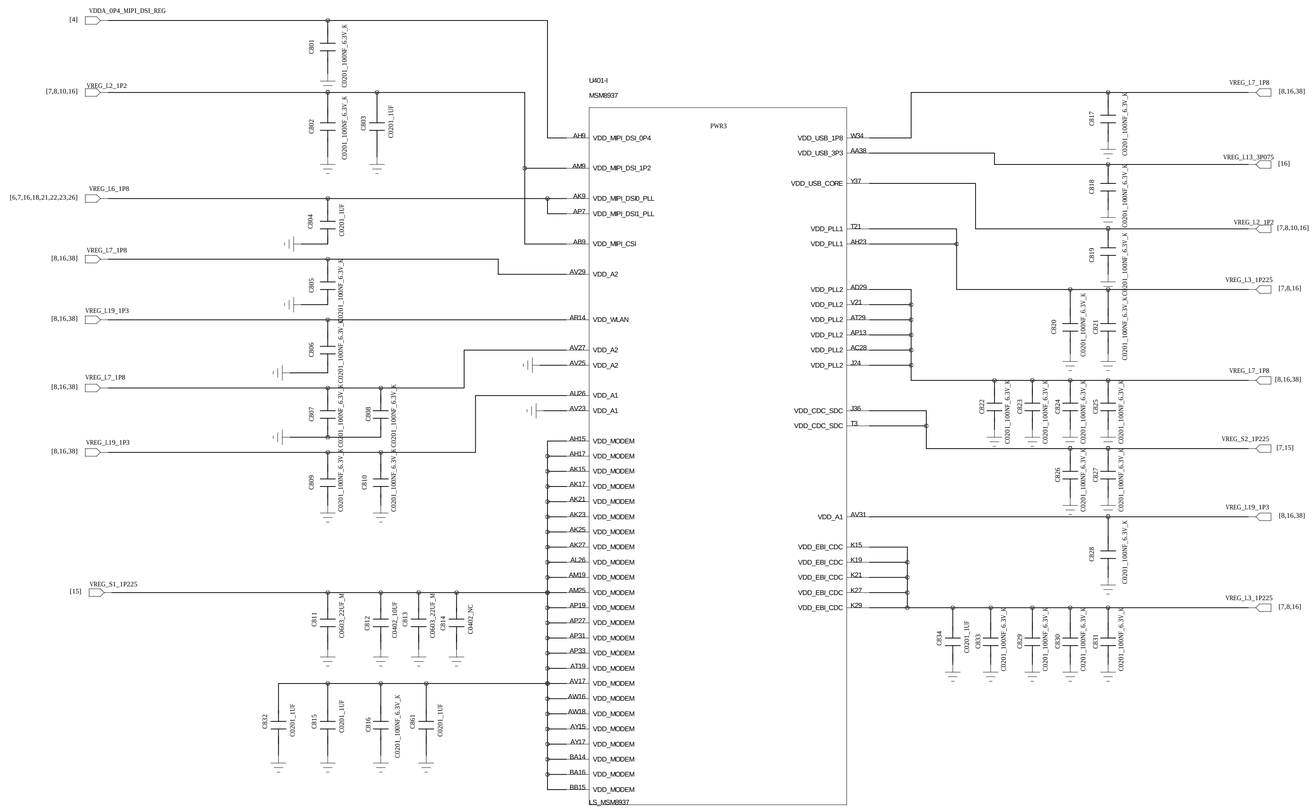

DRAWN: Jimmy(BB), Yue Peng(RF)	DATED: 2016/10/06	COMPANY: HQ		
CHECKED: Yang Junli(BB),Zhang Ruofeng(RF)	DATED: 2016/10/10	TITLE: D52_MB_SCH_V1.0_161110		
QUALITY CONTROL:	DATED:	CODE:	SIZE: D	DRAWING NO: / REV: V1.0
RELEASED:	DATED:	SCALE:		SHEET: 8 OF 38

REVISION RECORD			
LTR	ECO NO:	APPROVED:	DATE:

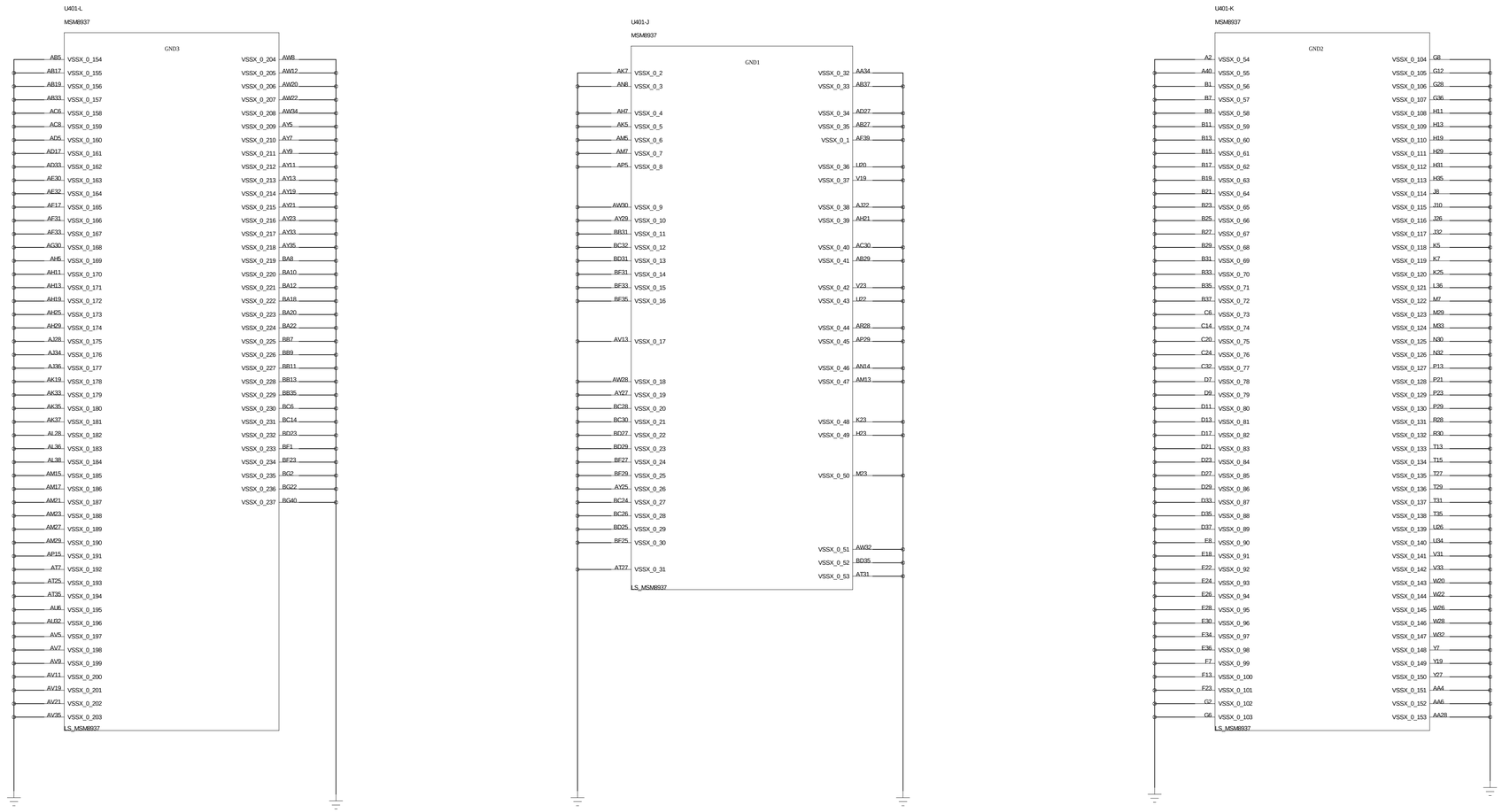

COMPANY: HQ			
TITLE: D52_MB_SCH_V1.0_161110			
DRAWN: Jimmy(BB), Yue Peng(RF)	DATED: 2016/10/06		
CHECKED: Yang Junli(BB),Zhang Ruofeng(RF)	DATED: 2016/10/10	CODE:	SIZE: D
QUALITY CONTROL:	DATED:	DRAWING NO:	REV: V1.0
RELEASED:	DATED:	SCALE:	SHEET: 9 OF 38

MEMORY:LPDDR3+EMMC

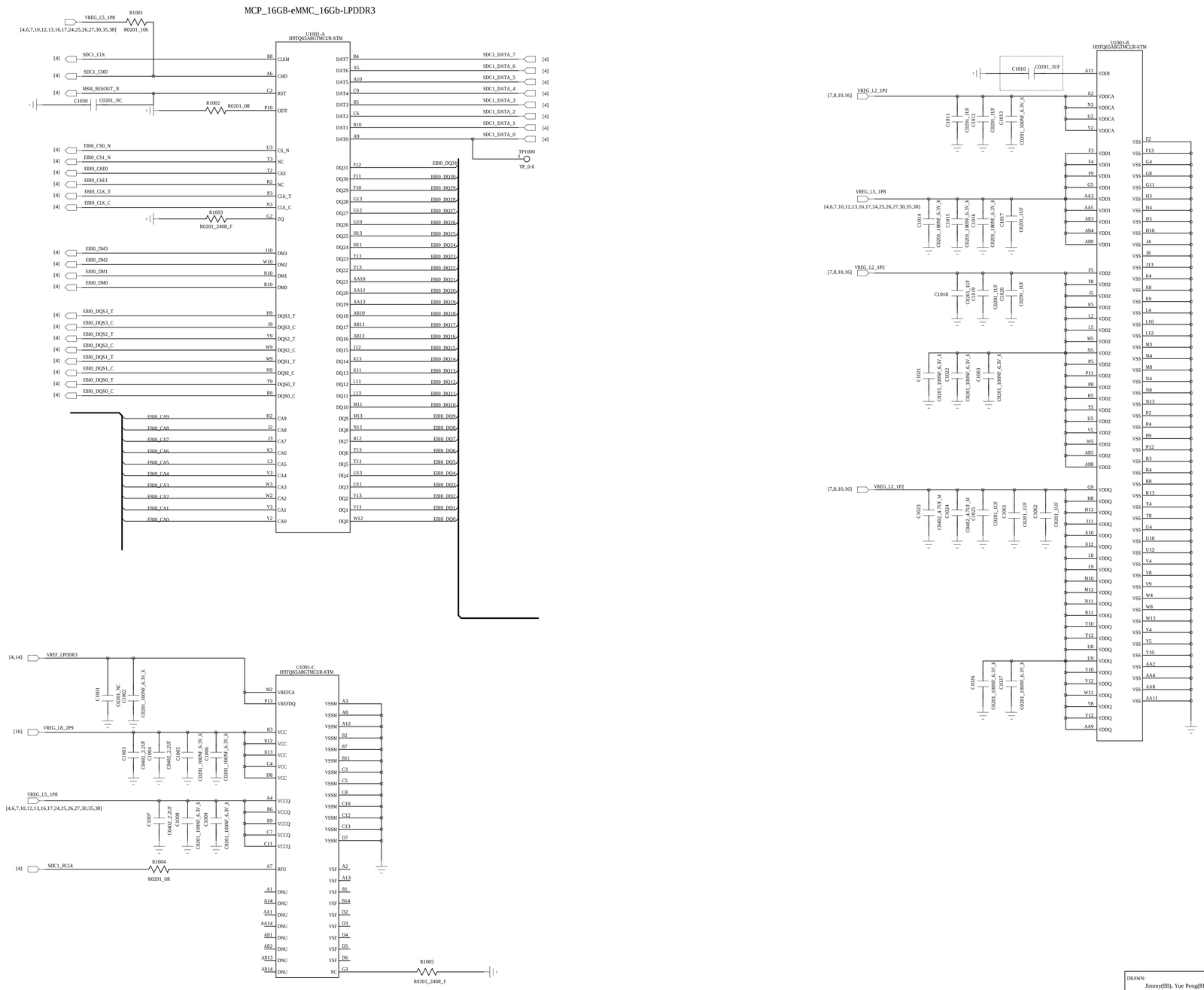

REVISION RECORD			
LTR	ECO NO:	APPROVED:	DATE:

DRAWN: Jimmy(BB), Yue Peng(RF)	DATED: 2016/10/06	COMPANY: HQ	
CHECKED: Yang Junli(BB),Zhang Ruofeng(RF)	DATED: 2016/10/10	TITLE: D52_MB_SCH_V1.0_161110	
QUALITY CONTROL:	DATED:	CODE:	SIZE: D / DRAWING NO: / REV: V1.0
RELEASED:	DATED:	SCALE:	SHEET: 10 OF 38

REVISION RECORD			
LTR	ECO NO:	APPROVED:	DATE:

11:SMB1351

DRAWN: Jimmy(BB), Yue Peng(RF)	DATED: 2016/10/06	COMPANY: HQ			
CHECKED: Yang Junli(BB),Zhang Ruofeng(RF)	DATED: 2016/10/10	TITLE: D52_MB_SCH_V1.0_161110			
QUALITY CONTROL:	DATED:	CODE:	SIZE: D	DRAWING NO:	REV: V1.0
RELEASED:	DATED:	SCALE:		SHEET: 11 OF 38	

REVISION RECORD			
LTR	ECO NO:	APPROVED:	DATE:

12: PMI8952_CHARGE

PMI PIN	Connection on device without Wipower	Connection on device with Wipower
DVI2_EN	Pull down to GND with 0ohm	CONNECT TO WIPOWER MODE PIN
CHG_OK	Pull up to VDD_CAP with 51kohm	CONNECT TO WIPOWER CHOKE PIN
GPIO2	Hi-Z	10K PD TO GND

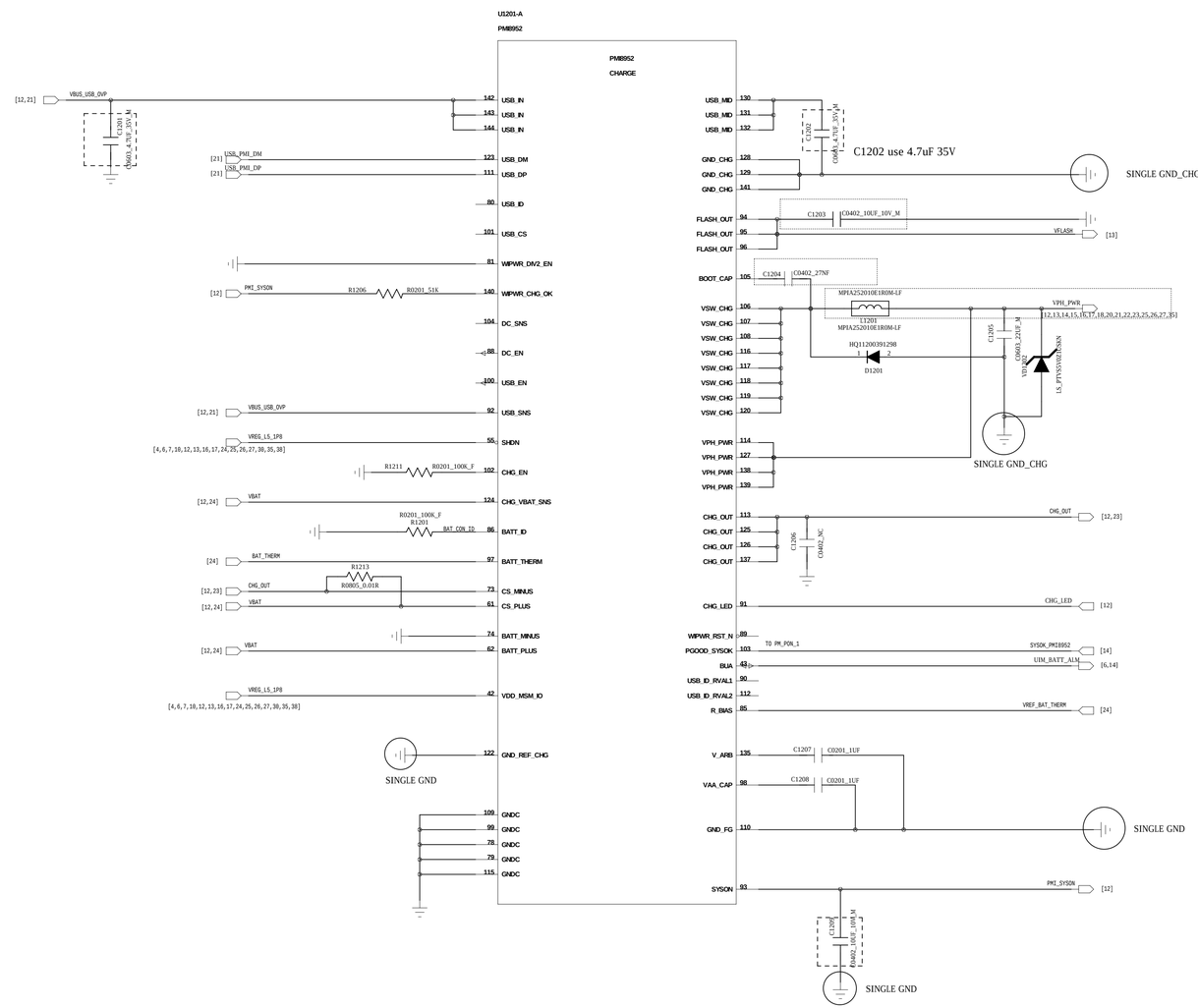

Charger LED

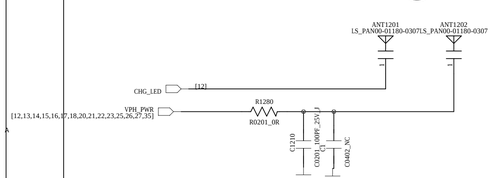

DRAWN: Jimmy(BB), Yue Peng(RF)	DATED: 2016/10/06	COMPANY: HQ			
CHECKED: Yang Junli(BB),Zhang Ruofeng(RF)	DATED: 2016/10/10	TITLE: D52_MB_SCH_V1.0_161110			
QUALITY CONTROL:	DATED:	CODE:	SIZE: D	DRAWING NO:	REV: V1.0
RELEASED:	DATED:	SCALE:		SHEET: 12 OF 38	

REVISION RECORD			
LTR	ECO NO:	APPROVED:	DATE:

13: PMI8952_CONTROL

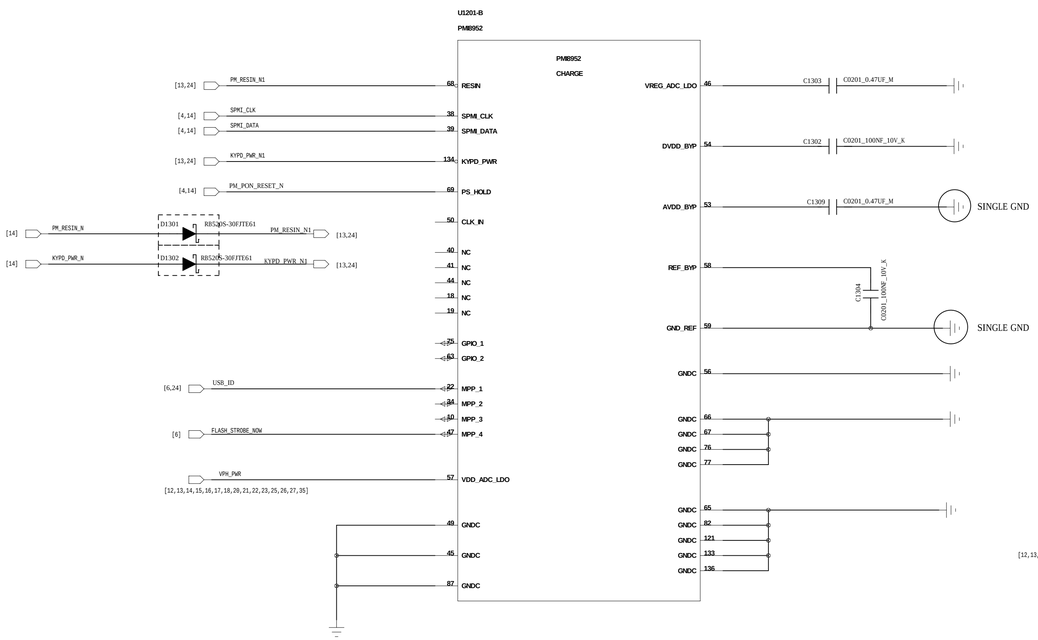

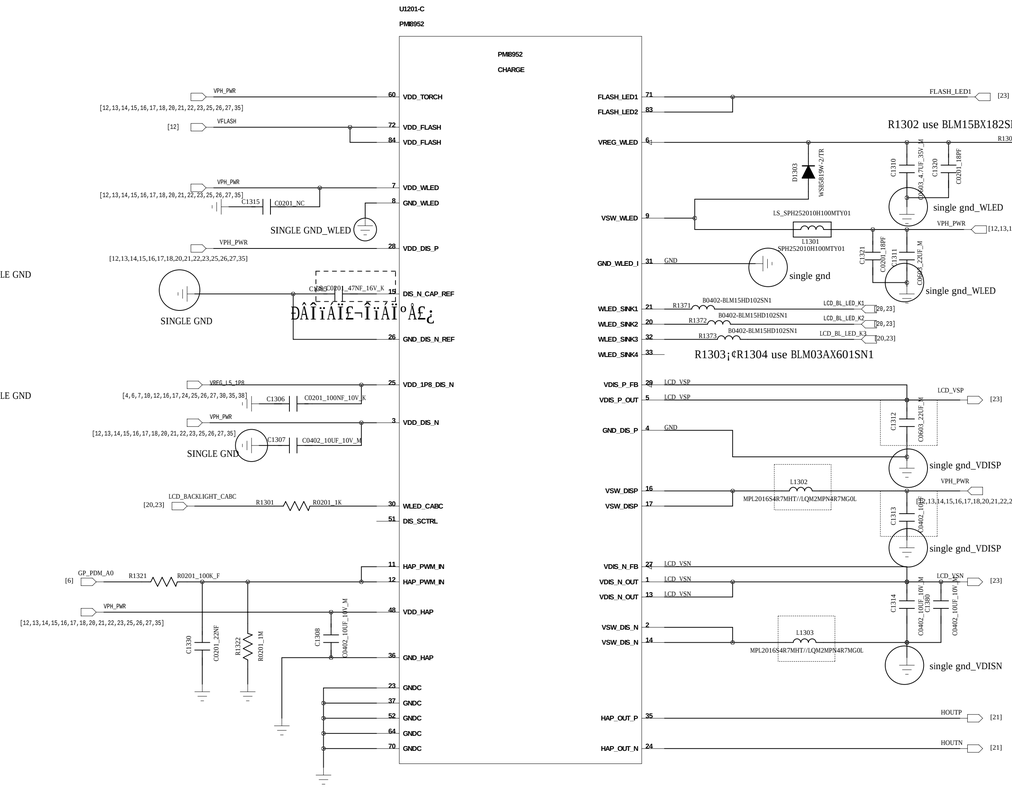

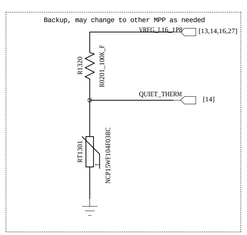

RT1301 is for CPU surface temperature detect

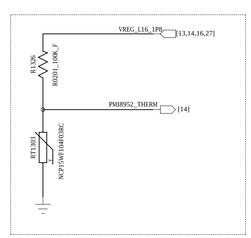

RT1303 is used for PMI surface temperature detect

PMI8952 INTERFACE

COMPANY: HQ					
TITLE: D52_MB_SCH_V1.0_161110					
DRAWN: Jimmy(BB), Yue Peng(RF)	DATED: 2016/10/06	CODE:	SIZE: D	DRAWING NO:	REV: V1.0
CHECKED: Yang Junli(BB),Zhang Ruofeng(RF)	DATED: 2016/10/10				
QUALITY CONTROL:	DATED:				
RELEASED:	DATED:	SCALE:		SHEET: 13 OF 38	

REVISION RECORD			
LTR	ECO NO:	APPROVED:	DATE:

PM8937 Control and MPP/Clock

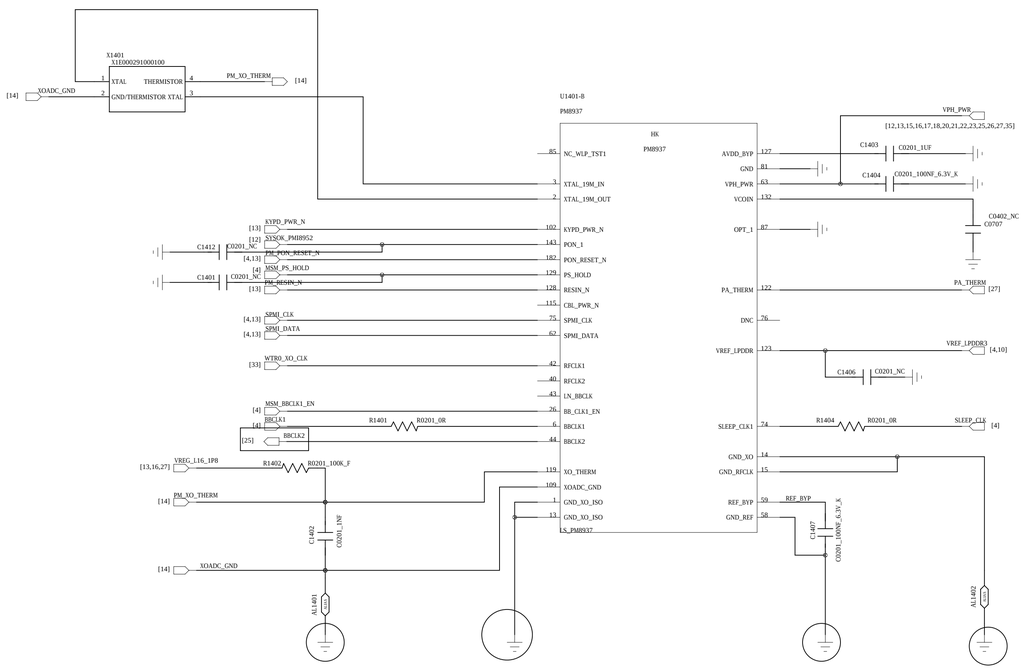

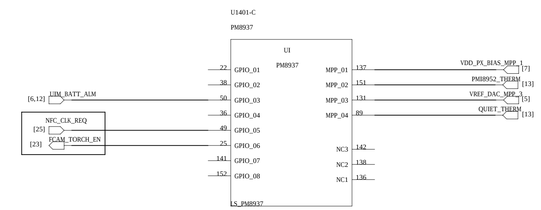

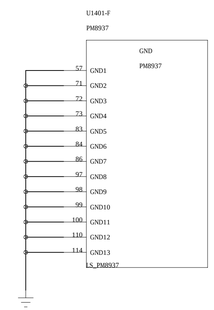

COMPANY: HQ			
TITLE: D52_MB_SCH_V1.0_161110			
DRAWN: Jimmy(BB), Yue Peng(RF)	DATED: 2016/10/06		
CHECKED: Yang Junli(BB),Zhang Ruofeng(RF)	DATED: 2016/10/10	CODE:	SIZE: D
QUALITY CONTROL:	DATED:	DRAWING NO:	REV: V1.0
RELEASED:	DATED:	SCALE:	SHEET: 14 OF 38

REVISION RECORD			
LTR	ECO NO:	APPROVED:	DATE:

PM8937 Buck converter

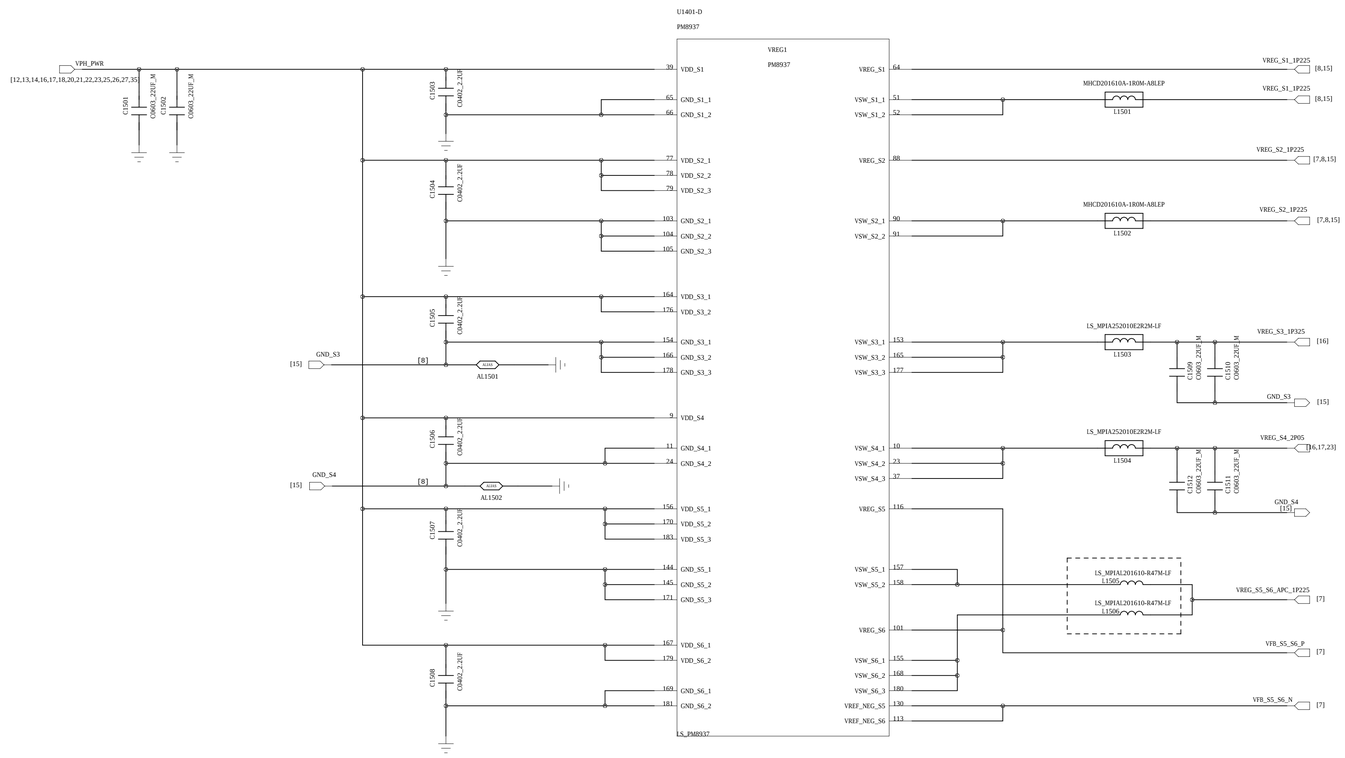

COMPANY: HQ			
TITLE: D52_MB_SCH_V1.0_161110			
DRAWN: Jimmy(BB), Yue Peng(RF)	DATED: 2016/10/06		
CHECKED: Yang Junli(BB),Zhang Ruofeng(RF)	DATED: 2016/10/10		
QUALITY CONTROL:	DATED:		
RELEASED:	DATED:		
CODE:	SIZE: D	DRAWING NO:	REV: V1.0
SCALE:		SHEET: 15 OF 38	

REVISION RECORD			
LTR	ECO NO:	APPROVED:	DATE:

PM8937 LDO circuits

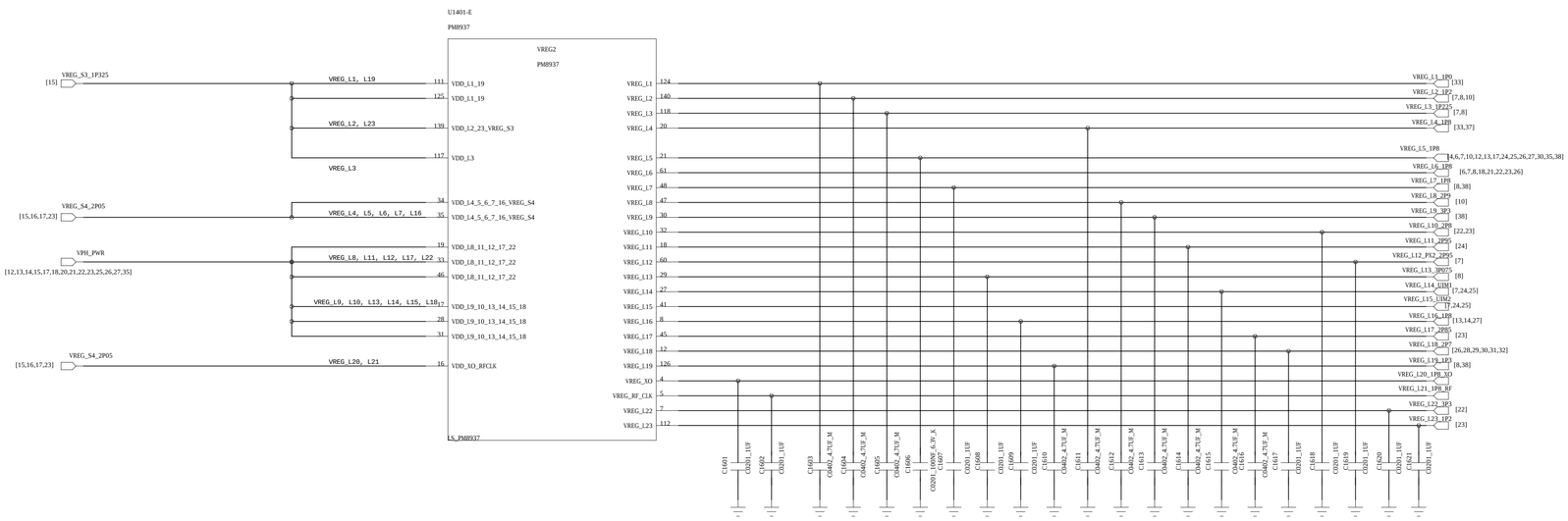

PSEUDO CAPLESS LDOs
L4*, L6, L8*, L9*, L10, L11*, L12, L14, L15, L17*, L18, L22, L23
L4*, L8*, L9*, L11*, L17*, still need validation as Pseudo-capless
L5, L7, L13, L16 have internal PMIC Loads and require local CAPs.

DRAWN: Jimmy(BB), Yue Peng(RF)	DATED: 2016/10/06	COMPANY: HQ	
CHECKED: Yang Junli(BB),Zhang Ruofeng(RF)	DATED: 2016/10/10	TITLE: D52_MB_SCH_V1.0_161110	
QUALITY CONTROL:	DATED:	CODE:	SIZE: D
RELEASED:	DATED:	DRAWING NO:	REV: V1.0
		SCALE:	SHEET: 16 OF 38

REVISION RECORD			
LTR	ECO NO:	APPROVED:	DATE:

PM8937 Codec

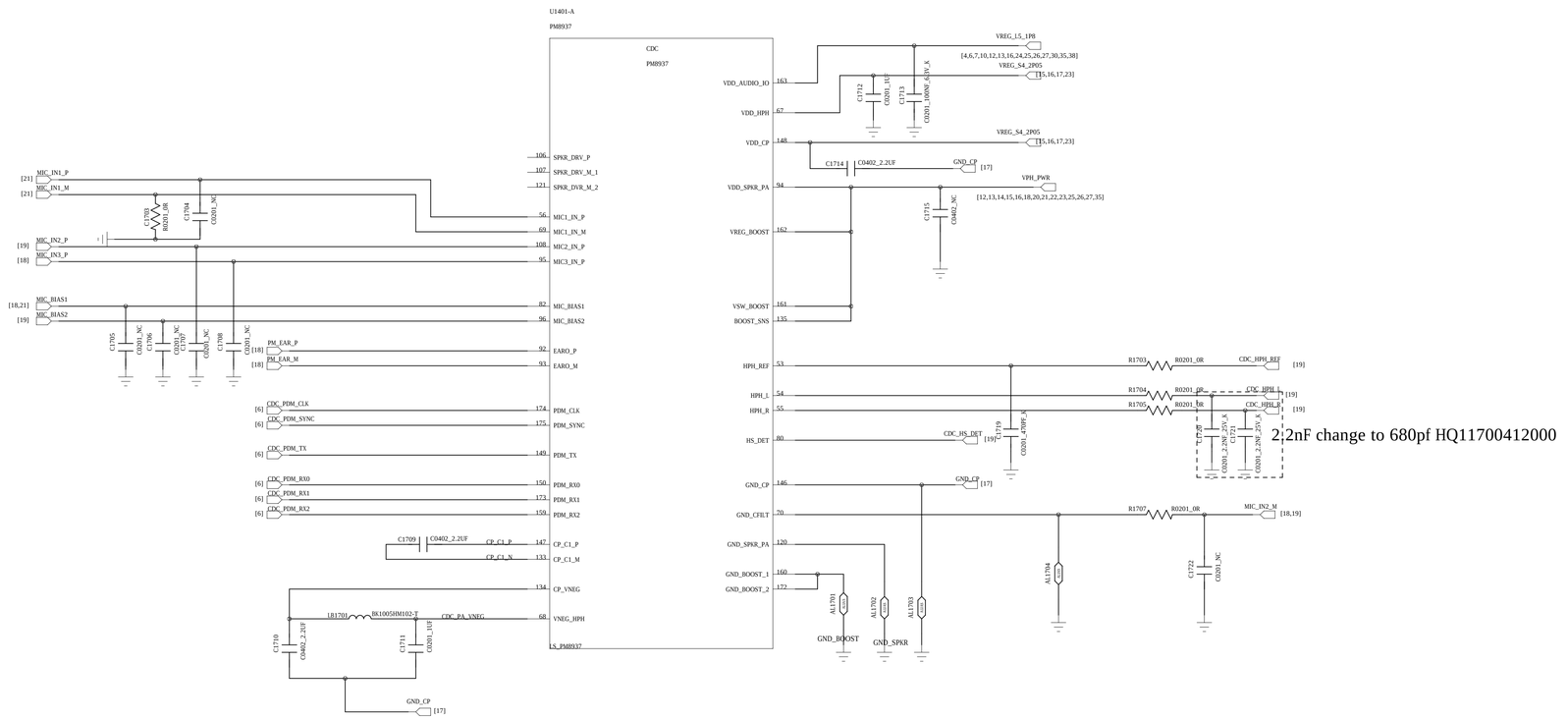

DRAWN: Jimmy(BB), Yue Peng(RF)	DATED: 2016/10/06	COMPANY: HQ	
		TITLE: D52_MB_SCH_V1.0_161110	
CHECKED: Yang Junli(BB),Zhang Ruofeng(RF)	DATED: 2016/10/10	CODE:	SIZE: D / DRAWING NO: / REV: V1.0
QUALITY CONTROL:	DATED:		
RELEASED:	DATED:	SCALE:	SHEET: 17 OF 38

REVISION RECORD			
LTR	ECO NO:	APPROVED:	DATE:

MIC

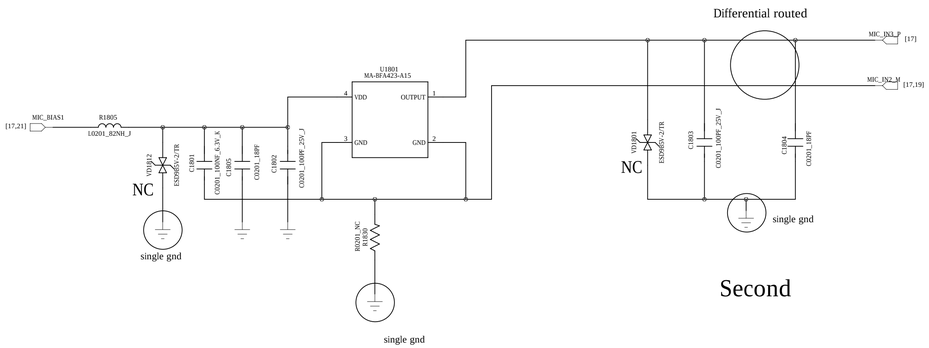

SPK PA

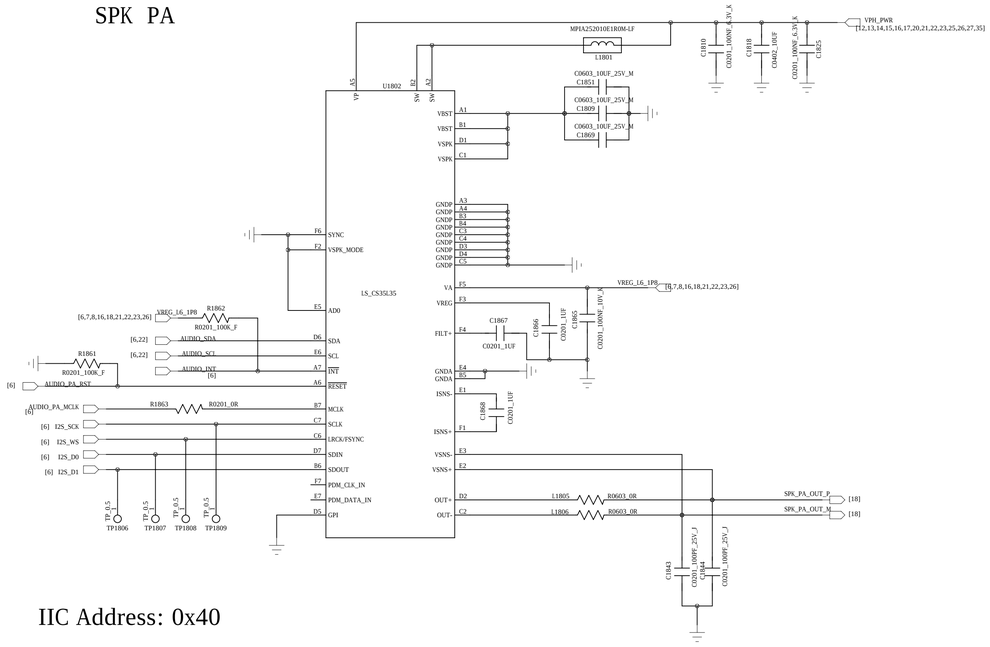

IIC Address: 0x40

RECEIVER

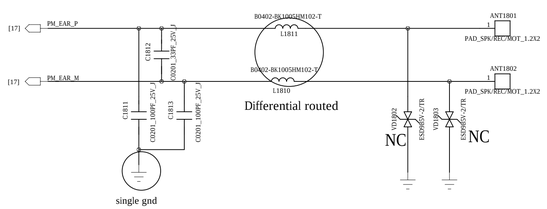

SPK

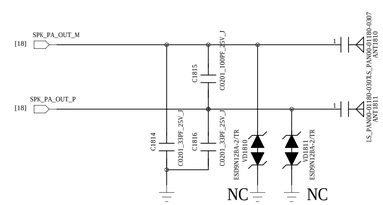

SECONDARY MIC/RECEIVER

COMPANY: HQ					
TITLE: D52_MB_SCH_V1.0_161110					
DRAWN: Jimmy(BB), Yue Peng(RF)	DATED: 2016/10/06				
CHECKED: Yang Junli(BB),Zhang Ruofeng(RF)	DATED: 2016/10/10	CODE:	SIZE: D	DRAWING NO:	REV: V1.0
QUALITY CONTROL:	DATED:				
RELEASED:	DATED:	SCALE:		SHEET: 18 OF 38	

HEADSET JACK

REVISION RECORD			
LTR	ECO NO:	APPROVED:	DATE:

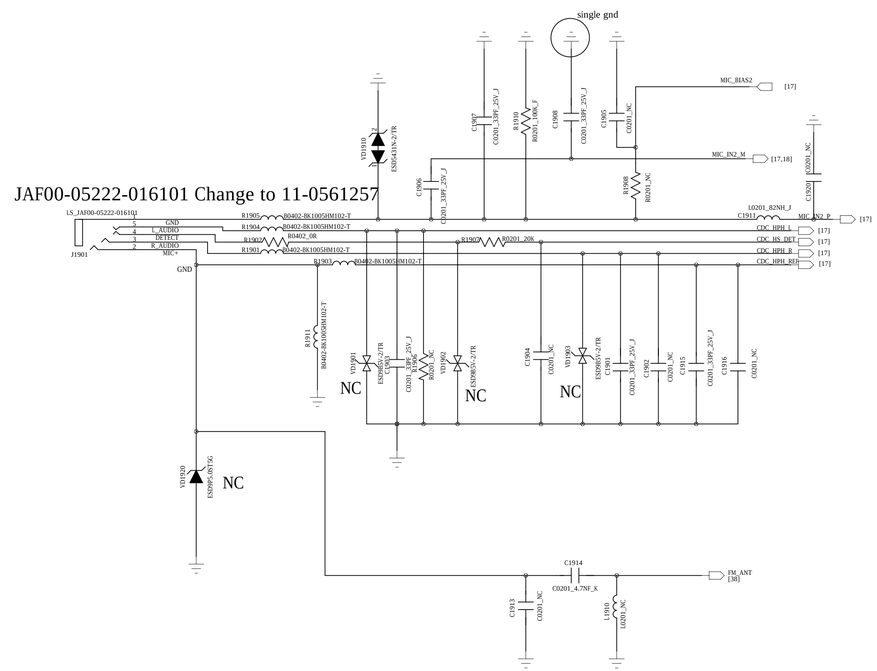

DRAWN: Jimmy(BB), Yue Peng(RF)	DATED: 2016/10/06	COMPANY: HQ	
CHECKED: Yang Junli(BB),Zhang Ruofeng(RF)	DATED: 2016/10/10	TITLE: D52_MB_SCH_V1.0_161110	
QUALITY CONTROL:	DATED:	CODE:	SIZE: D / DRAWING NO: / REV: V1.0
RELEASED:	DATED:	SCALE:	SHEET: 19 OF 38

REVISION RECORD			
LTR	ECO NO:	APPROVED:	DATE:

LCD-Backlight Driver

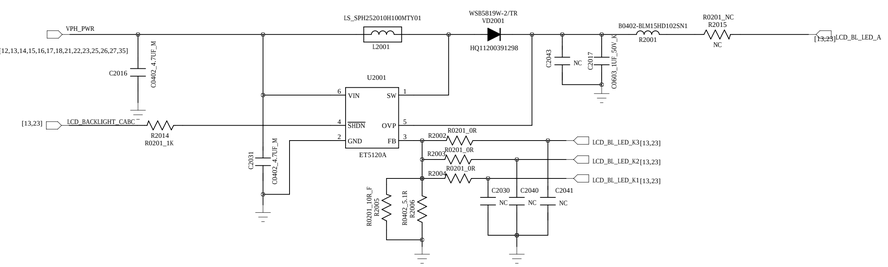

DRAWN: Jimmy(BB), Yue Peng(RF)	DATED: 2016/10/06
CHECKED: Xiang Junli(BB),Zhang Ruofeng(RF)	DATED: 2016/10/10
QUALITY CONTROL:	DATED:
RELEASED:	DATED:

COMPANY: HQ

TITLE: D52_MB_SCH_V1.0_161110

CODE:	SIZE:	DRAWING NO:	REV:
	D		V1.0

SCALE:

SHEET: 20 OF 38

REVISION RECORD			
LTR	ECO NO:	APPROVED:	DATE:

Motor

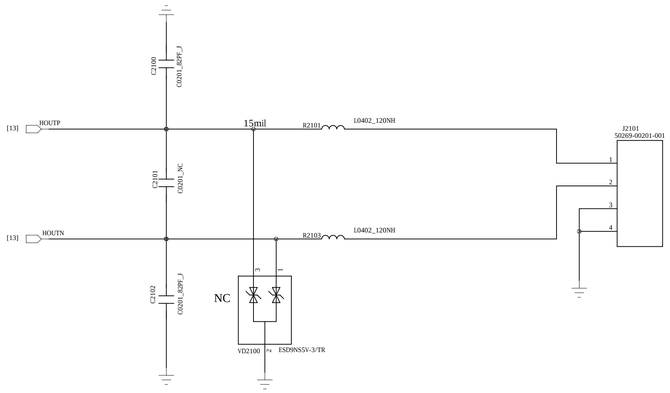

USB

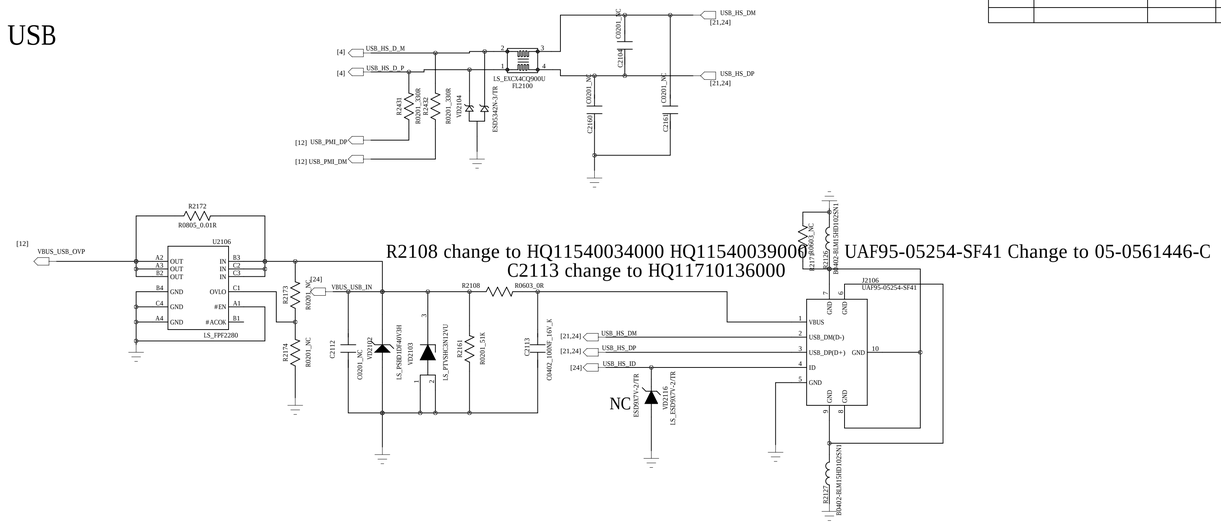

R2108 change to HQ11540034000 HQ11540039000
C2113 change to HQ11710136000
UAF95-05254-SF41 Change to 05-0561446-C

MAIN MIC

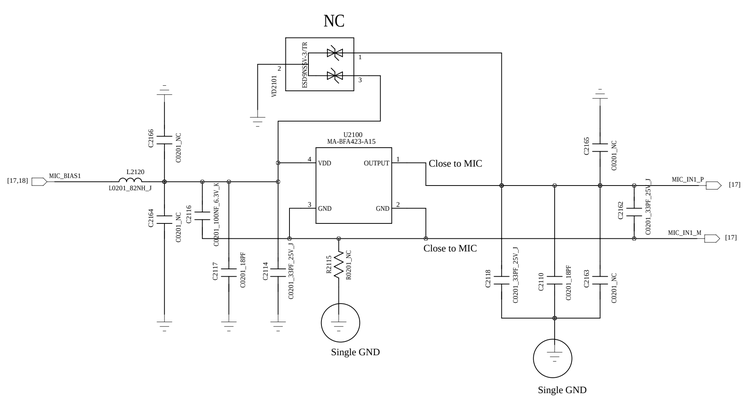

FPS

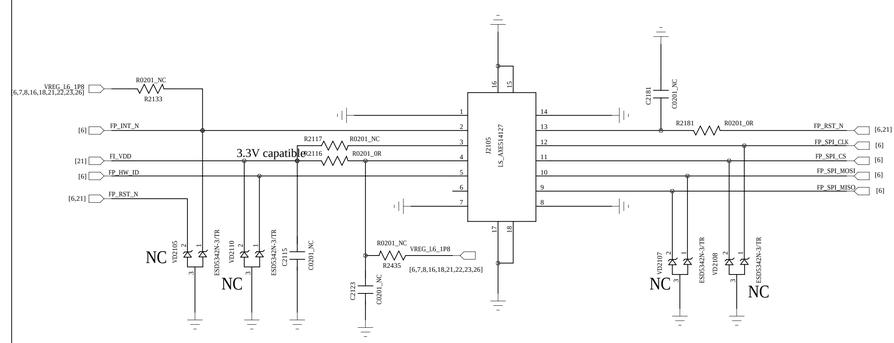

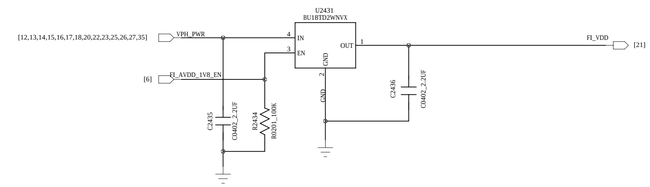

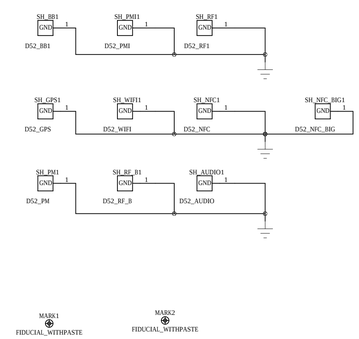

DRAWN: Jimmy(BB), Yue Peng(RF)	DATED: 2016/10/06	COMPANY: HQ	
CHECKED: Yang Junli(BB),Zhang Ruofeng(RF)	DATED: 2016/10/10	TITLE: D52_MB_SCH_V1.0_161110	
QUALITY CONTROL:	DATED:	CODE: / SIZE: / DRAWING NO:	REV: V1.0
RELEASED:	DATED:	SCALE:	SHEET: 1 OF 1

REVISION RECORD			
LTR	ECO NO:	APPROVED:	DATE:

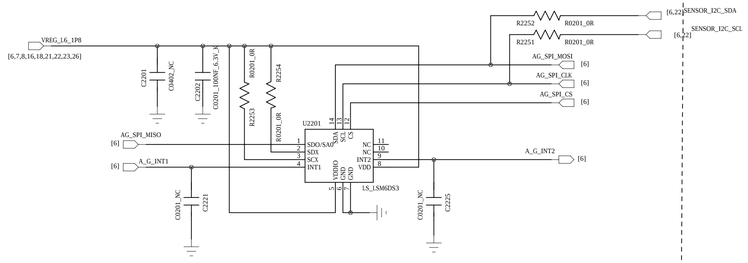

A+G

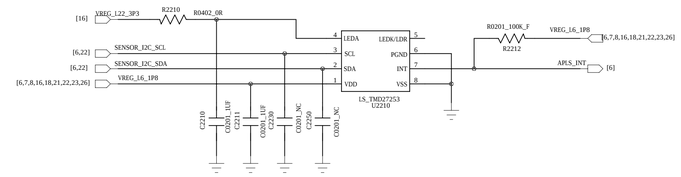

ALS+PS

I2C ADDRESS 0X49 (WRITE:0X92; READ:0X93)

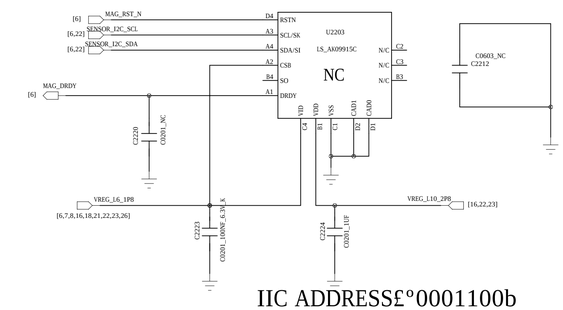

IIC ADDRESS£°0001100b

COMPASS AK09915C

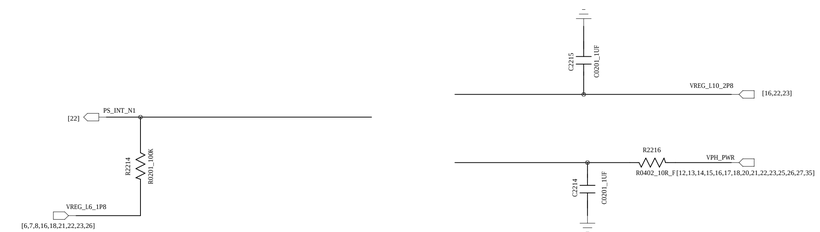

IIC Address: 0x23

ALS+PS

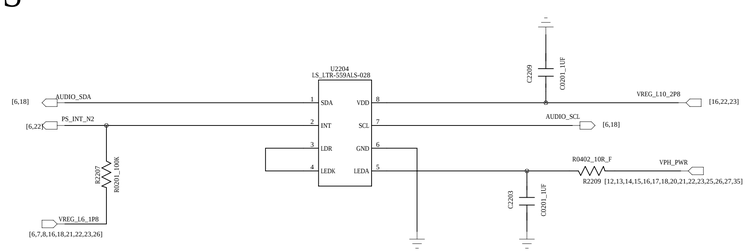

IIC Address: 0x23

ALS+PS

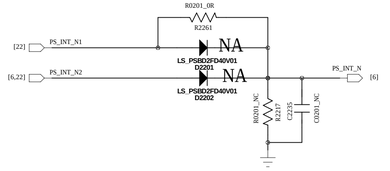

COMPANY:	HQ		
TITLE:	D52_MB_SCH_V1.0_161110		
DRAWN: Jimmy(BB), Yue Peng(RF)	DATED: 2016/10/06	CODE:	SIZE: D
CHECKED: Yang Junli(BB),Zhang Ruofeng(RF)	DATED: 2016/10/10	DRAWING NO:	REV: V1.0
QUALITY CONTROL:	DATED:		
RELEASED:	DATED:	SCALE:	SHEET: 22 OF 38

CAMERA

Note: If best EMI practices are followed for MIPI CSI/DSI signals, there is no need for common mode choke filters. You may choose to have placeholders for common mode depending upon your design constraints.
Extreme care must be taken that no stubs are created by doing so.

Front Camera 16MP

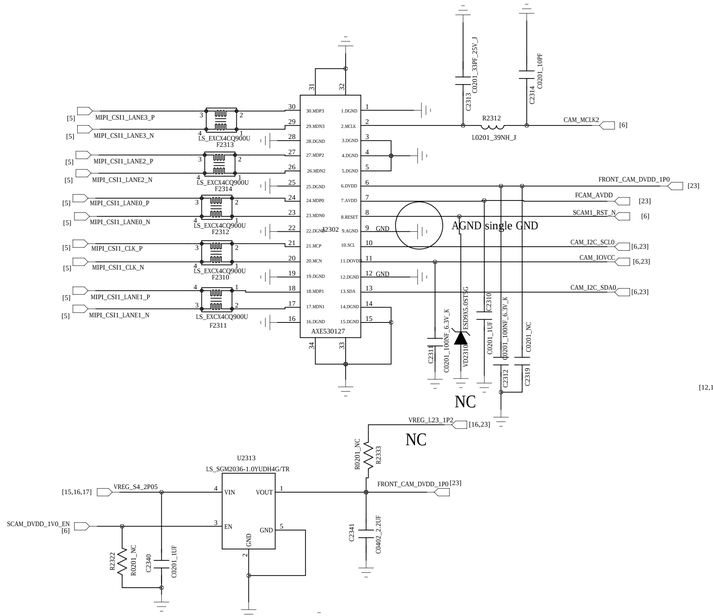

CHANGE TO WL2820D28-4/TR

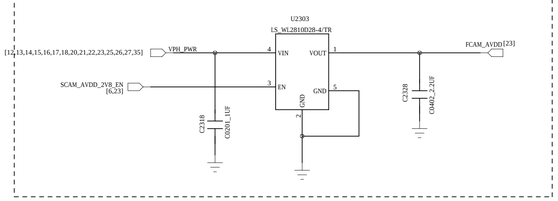

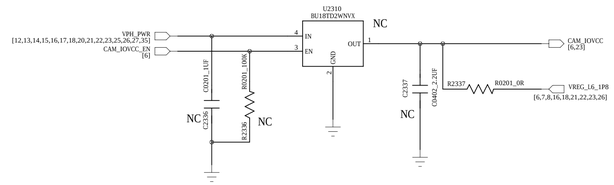

Main Camera 13MP

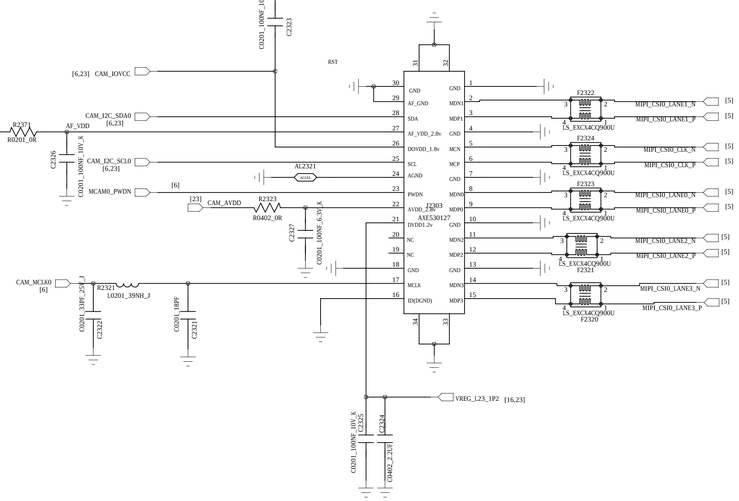

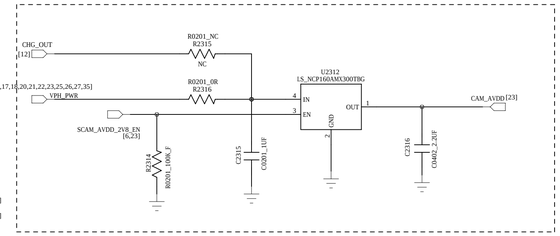

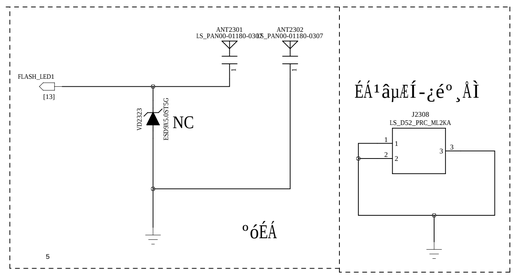

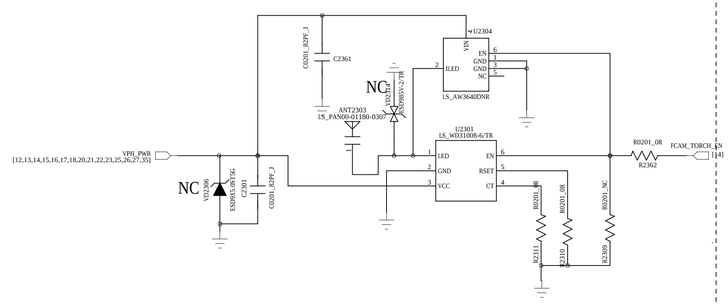

LCD interface and backlight

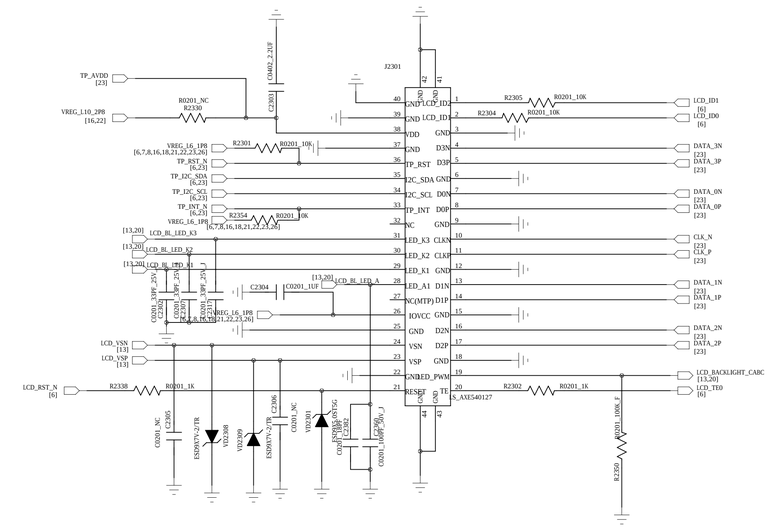

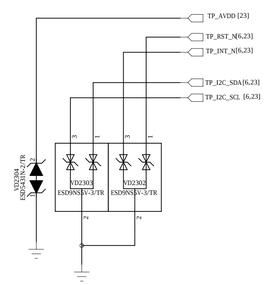

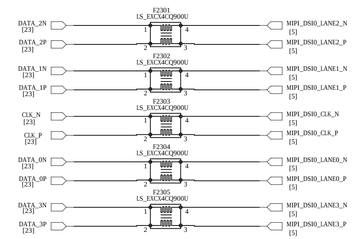

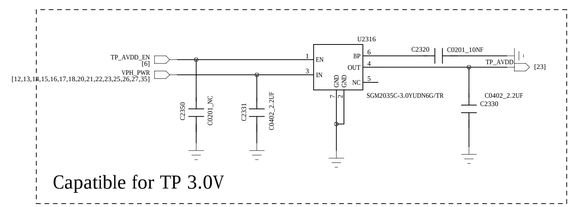

REVISION RECORD			
LTR	ECO NO:	APPROVED:	DATE:

COMPANY: HQ			
TITLE: D52_MB_SCH_V1.0_161110			
DRAWN: Jimmy(BB), Yue Peng(RF)	DATED: 2016/10/06		
CHECKED: Yang Junli(BB),Zhang Ruofeng(RF)	DATED: 2016/10/10	CODE:	SIZE: D
QUALITY CONTROL:	DATED:	DRAWING NO: 1	REV: V1.0
RELEASED:	DATED:	SCALE:	SHEET: 23 OF 38

REVISION RECORD			
LTR	ECO NO:	APPROVED:	DATE:

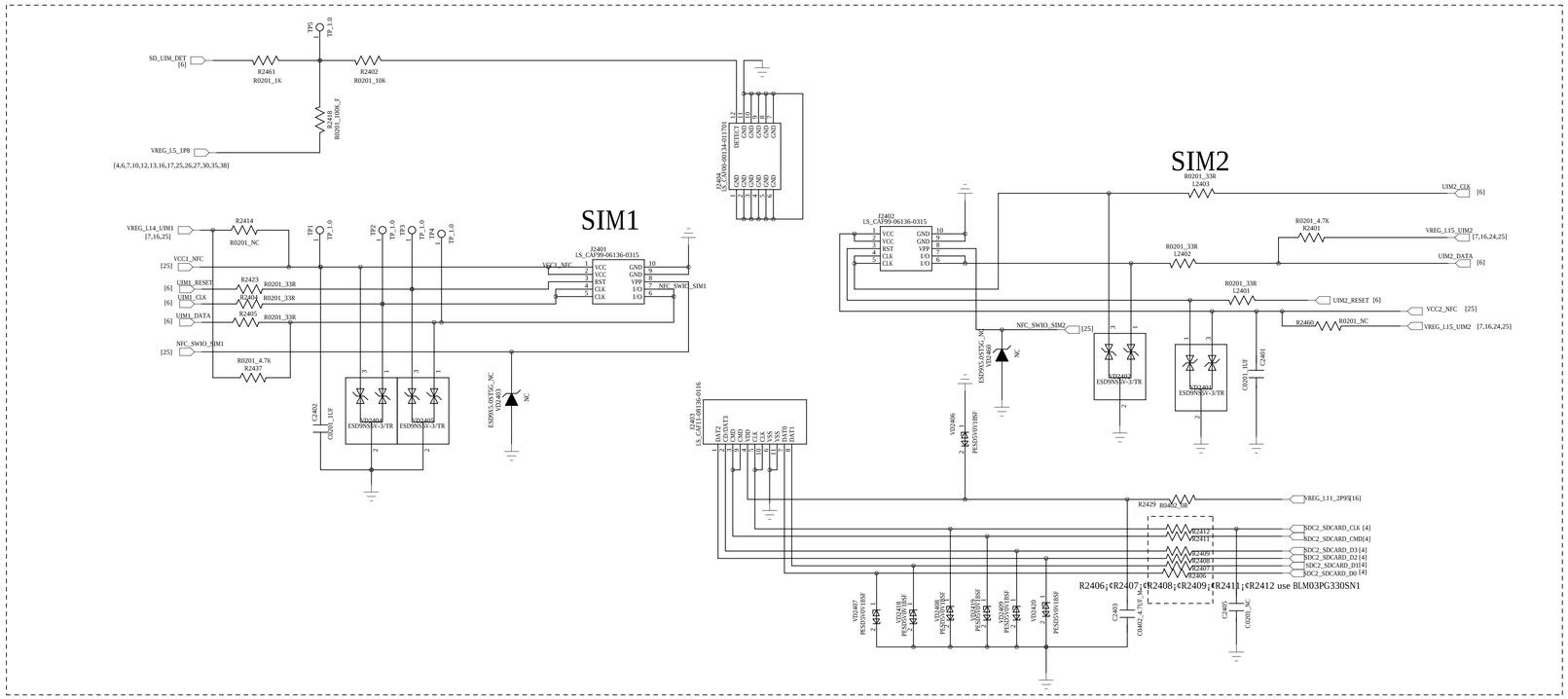

Battery Connector

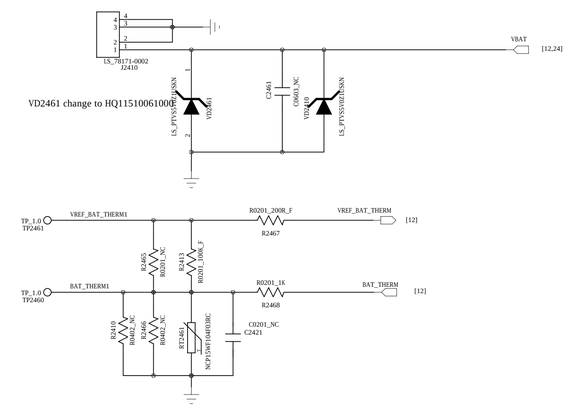

ÕÅ¼DN&¿ÔÉ-ÎÅÕÔÉ±£-ÐèÒ°ÓÜ½ÓüÐ¼ßÉÏ½~TP2460°ÍTP2461¶½Ó¡£ÜÅÑüÉ-Ê£½Ò¿ÉÓÔÉ¶±ÐÎ°µç³Ø²»ÓÜÎ»¡£
ÕÒ¼ÓR2467°ÍR2468Å¿µÅÊÇ·Å¼²µçÉ-°Í·ÀVREF_BAT_THERMØÜ½ÐN&ßÉÏTÓ¶ÎÅ·¡£

Keys

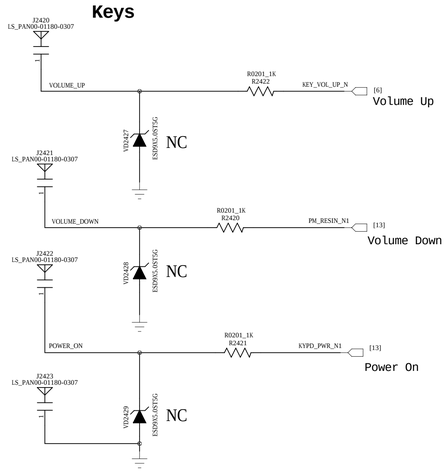

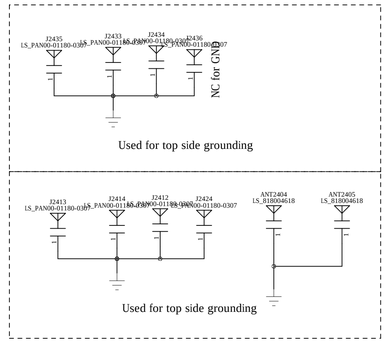

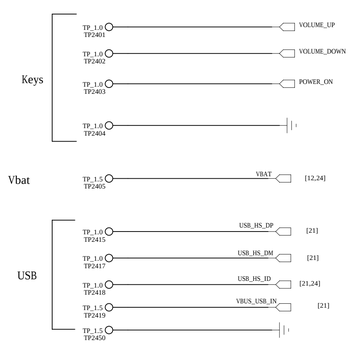

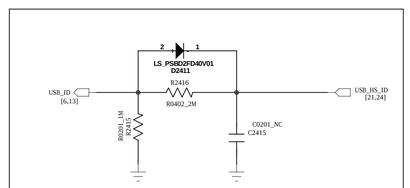

USB ID , moto design

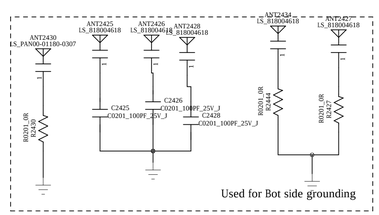

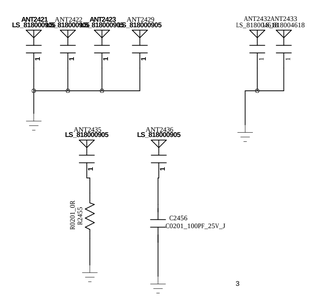

Signal	Description
KPSNS0	Volume Up
PM_RST_N	Volume Down
KYPD_PWR_N	PWER_ON
PM_RST_N + KYPD_PWR_N	Hardware Reset

DRAWN: Jimmy(BB), Yue Peng(RF)	DATED: 2016/10/06	COMPANY: HQ	
CHECKED: Yang Junli(BB),Zhang Ruofeng(RF)	DATED: 2016/10/10	TITLE: D52_MB_SCH_V1.0_161110	
QUALITY CONTROL:	DATED:	CODE:	SIZE: D / DRAWING NO: 1 / REV: V1.0
RELEASED:	DATED:	SCALE:	SHEET: 24 OF 38

REVISION RECORD			
LTR	ECO NO:	APPROVED:	DATE:

BB

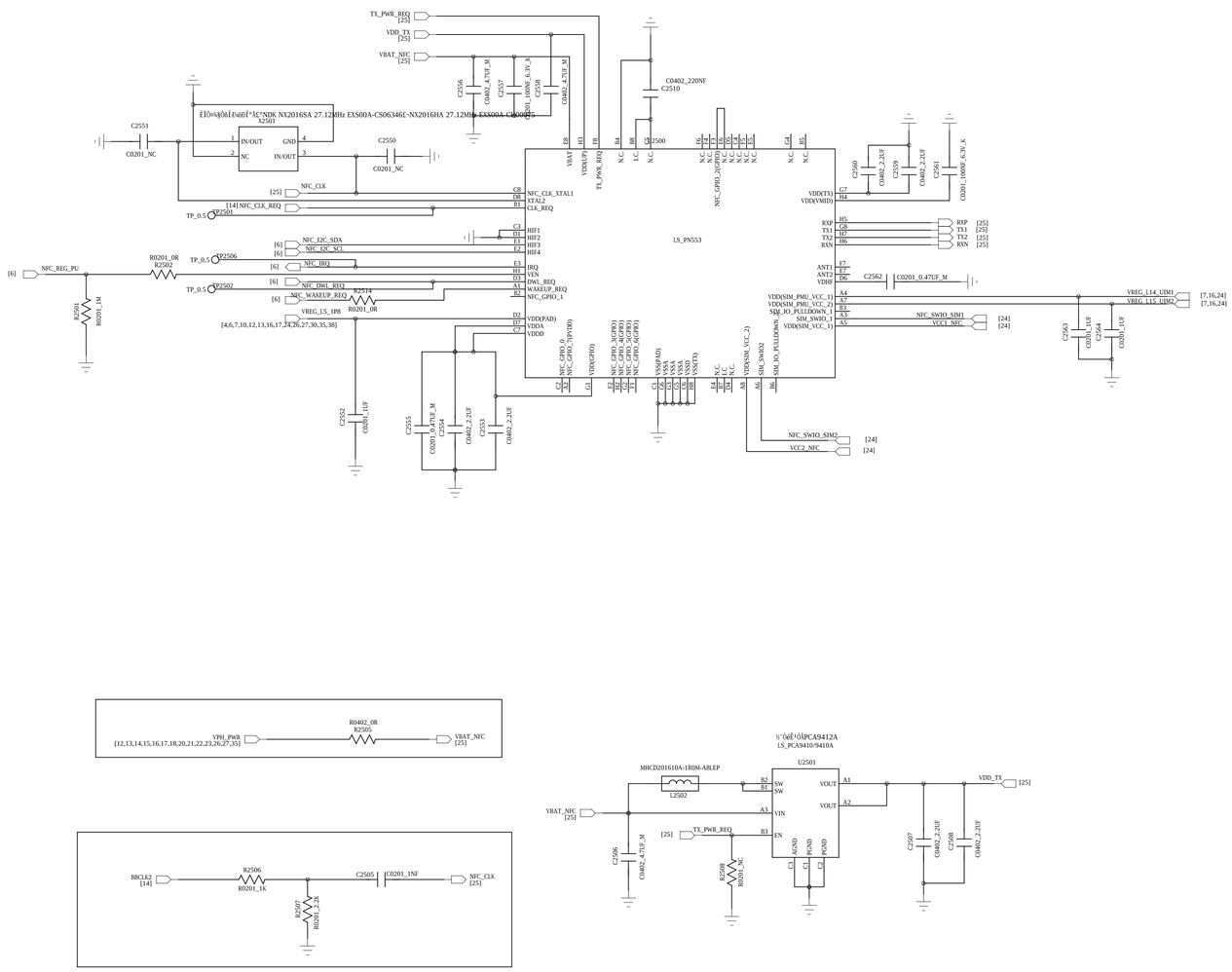

RF

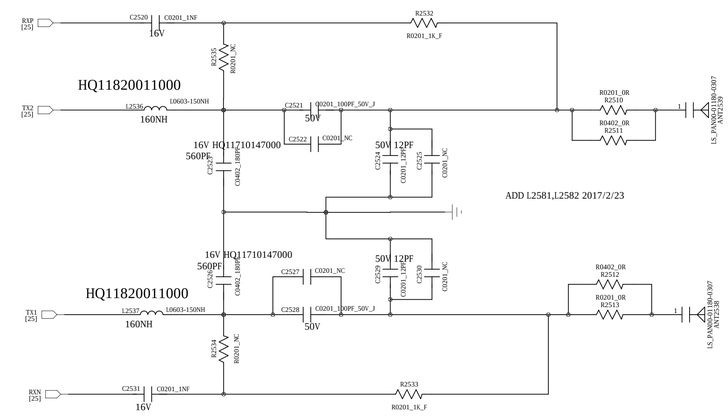

COMPANY: HQ			
TITLE: D52_MB_SCH_V1.0_161110			
DRAWN: Meng Zhang Jimmy(BB), Yue Peng(RF)	DATED: 2016/10/06		
CHECKED: Yang Junli(BB),Zhang Ruofeng(RF)	DATED: 2016/10/10		
QUALITY CONTROL: <QC By>	DATED: <QC Date>		
RELEASED: <Released By>	DATED: 07/16/2015		
CODE: <Code>	SIZE: D	DRAWING NO: <Drawing Number>	REV: V1.0
SCALE: <Scale>		SHEET: 35 38	

26: PRIMARY_ANTENNA

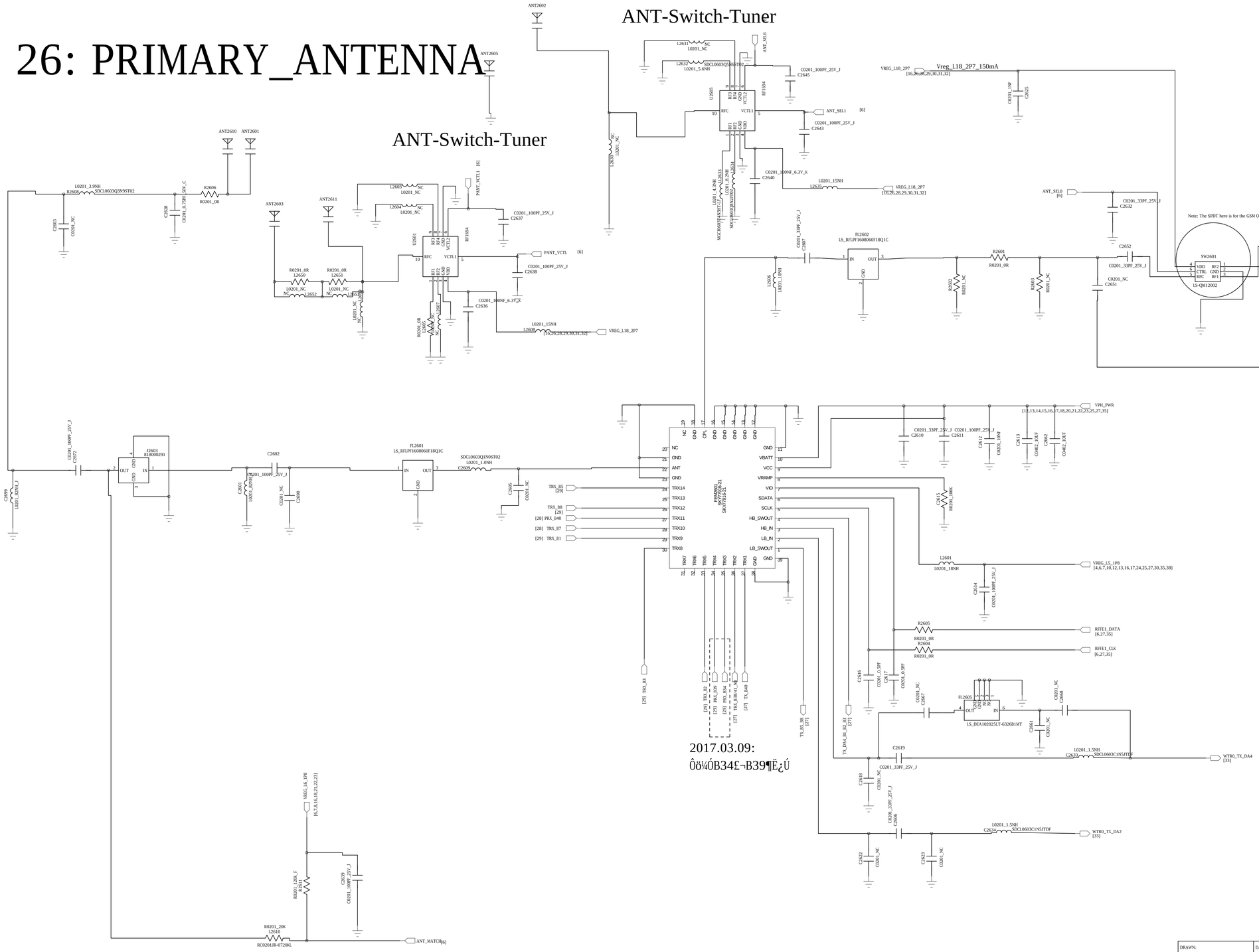

REVISION RECORD			
LTR	ECO NO:	APPROVED:	DATE:

COMPANY:	HQ		
TITLE:	D52_MB_SCH_V1.0_161110		
DRAWN: Jimmy(BB), Yue Peng(RF)	DATED: 2016/10/06		
CHECKED: Yang Junli(BB),Zhang Ruofeng(RF)	DATED: 2016/10/10		
QUALITY CONTROL:	DATED:		
RELEASED:	DATED:		
CODE:	SIZE: D	DRAWING NO:	REV: V1.0
SCALE:		SHEET: 26 OF 38	

27: SKY77643 & PA THERMAL

REVISION RECORD			
LTR	ECO NO:	APPROVED:	DATE:

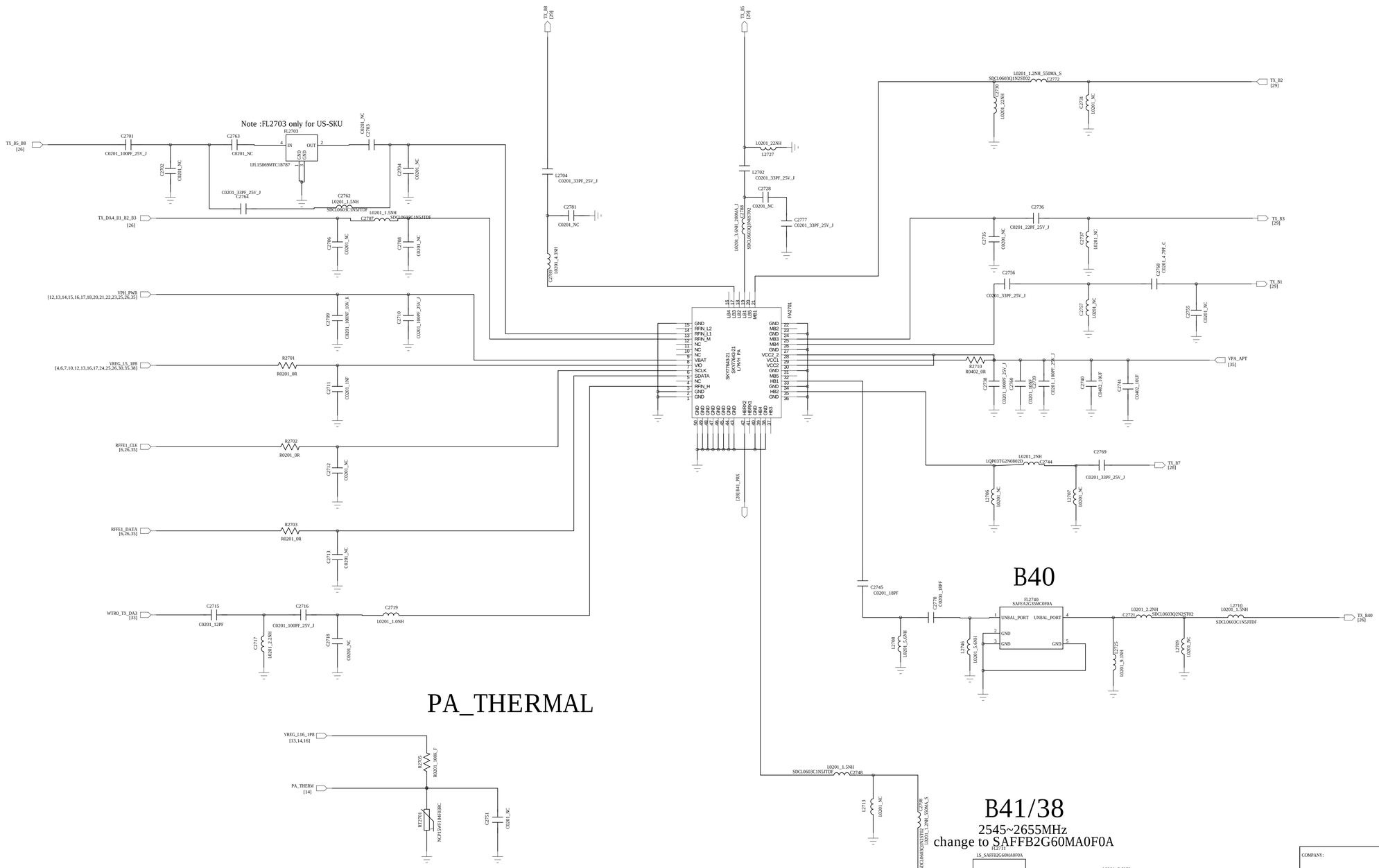

PA_THERMAL

COMPANY:	HQ		
TITLE:	D52_MB_SCH_V1.0_161110		
DRAWN: Jimmy(BB), Yue Peng(RF)	DATED: 2016/10/06		
CHECKED: Zhang Junli(BB),Zhang Ruofeng(RF)	DATED: 2016/10/10	CODE:	SIZE: D / DRAWING NO: / REV: V1.0
QUALITY CONTROL:	DATED:		
RELEASED:	DATED:	SCALE:	SHEET: 27 OF 38

28: TRX_HB

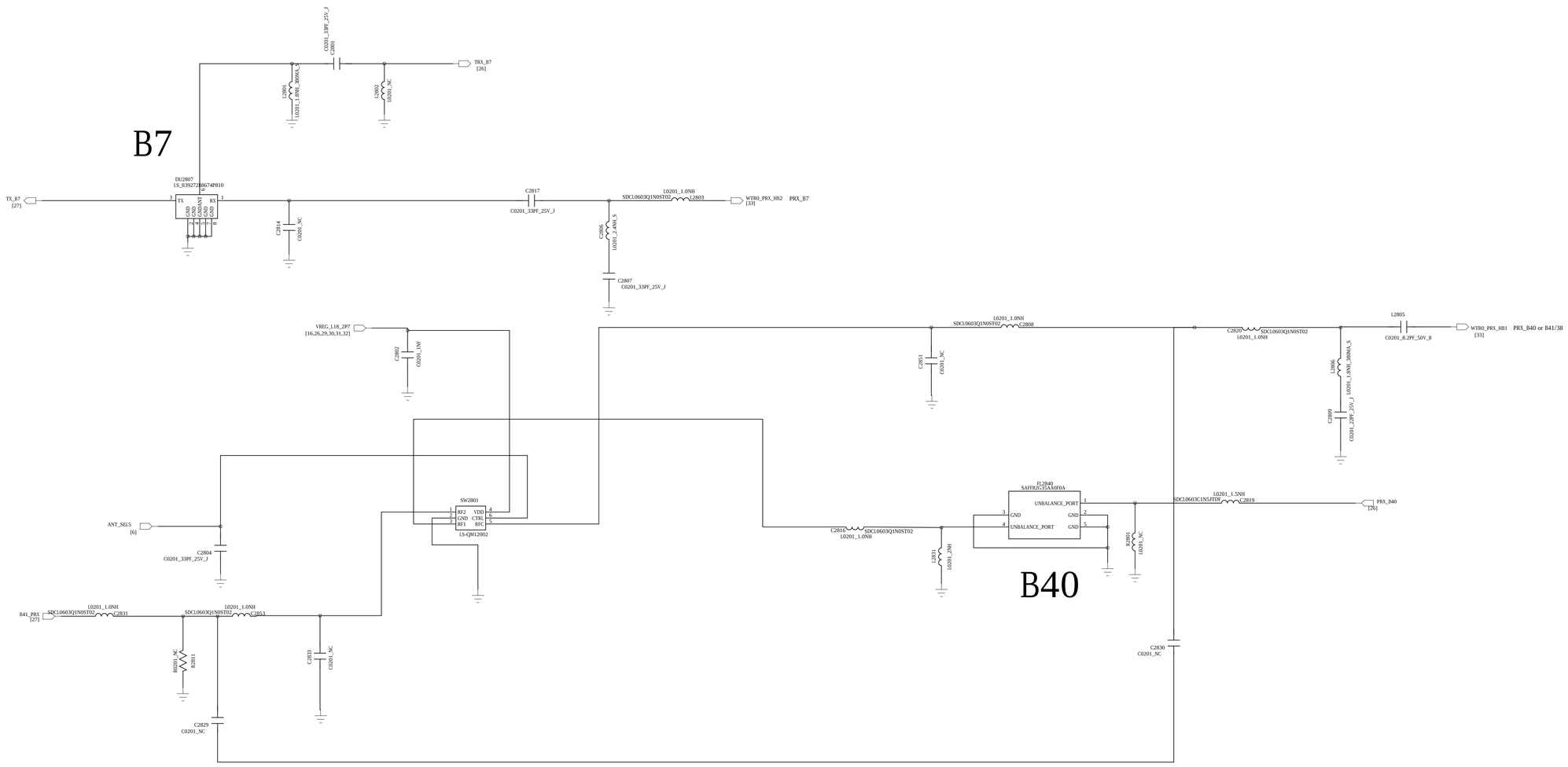

REVISION RECORD			
LTR	ECO NO:	APPROVED:	DATE:

DRAWN: Jimmy(BB), Yue Peng(RF)	DATED: 2016/10/06	COMPANY: HQ	
CHECKED: Yang Junli(BB),Zhang Ruofeng(RF)	DATED: 2016/10/10	TITLE: D52_MB_SCH_V1.0_161110	
QUALITY CONTROL:	DATED:	CODE: / SIZE: D / DRAWING NO: / REV: V1.0	
RELEASED:	DATED:	SCALE:	SHEET: 28 OF 38

29: TRX_LB_MB

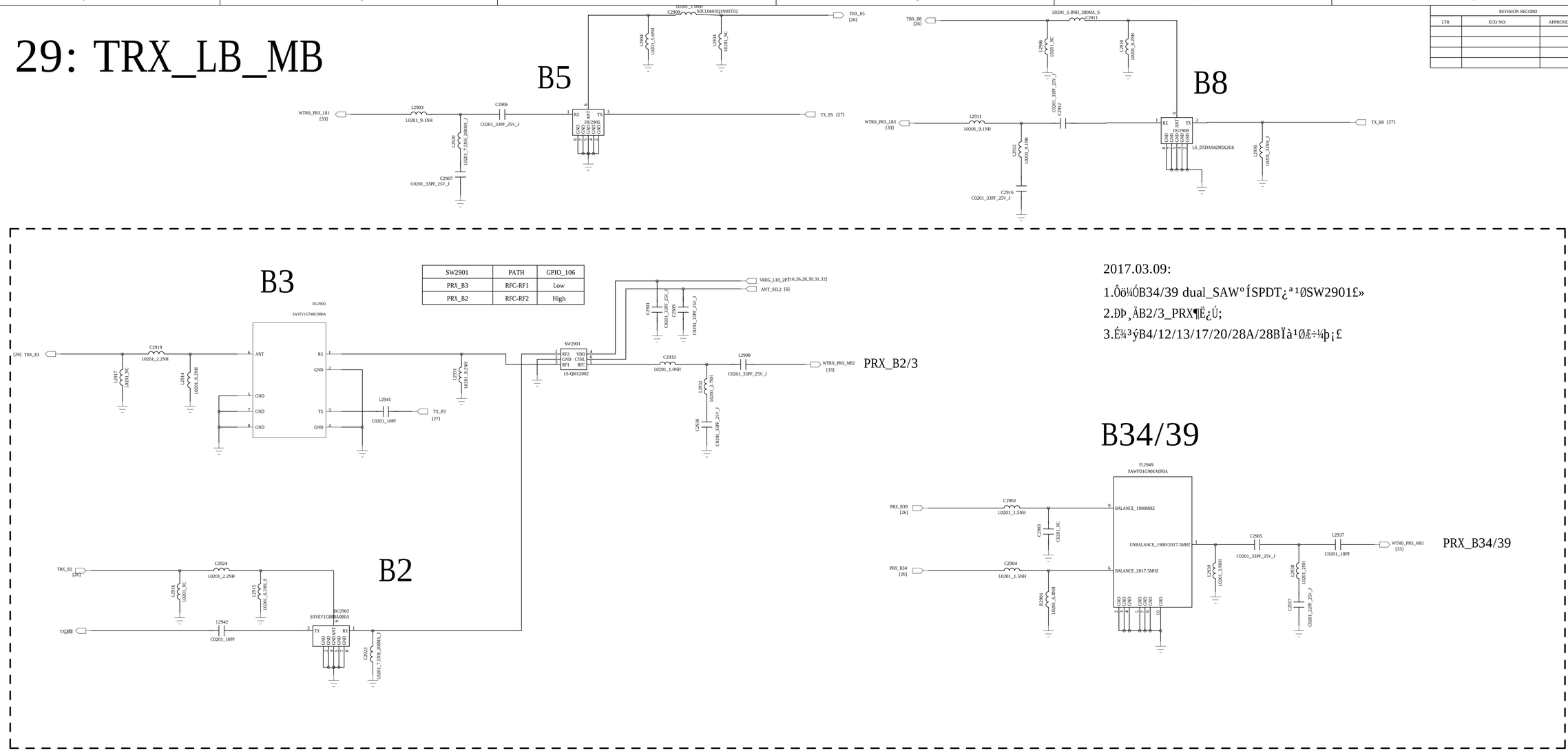

SW2901	PATH	GPIO_106
PRX_B3	RFC-RF1	Low
PRX_B2	RFC-RF2	High

REVISION RECORD			
LTR	ECO NO:	APPROVED:	DATE:

COMPANY: HQ			
TITLE: D52_MB_SCH_V1.0_161110			
DRAWN: Jimmy(BB), Yue Peng(RF)	DATED: 2016/10/06	CODE:	SIZE: D
CHECKED: Yang Junli(BB),Zhang Ruofeng(RF)	DATED: 2016/10/10	DRAWING NO:	REV: V1.0
QUALITY CONTROL:	DATED:		
RELEASED:	DATED:	SCALE:	SHEET: 29 OF 38

REVISION RECORD			
LTR	ECO NO:	APPROVED:	DATE:

30: DIVERSITY_ANT

DIV ANT TUNER

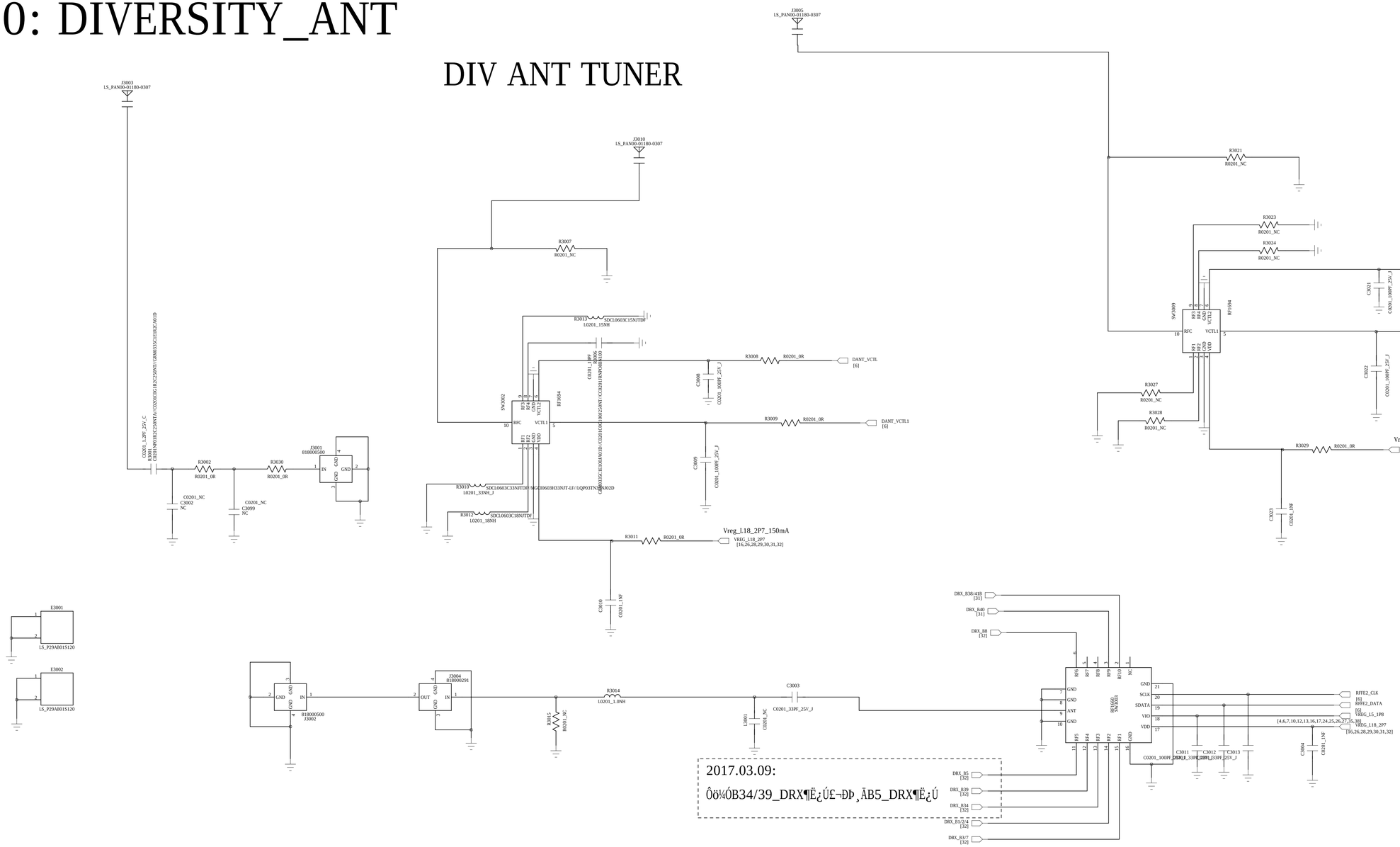

2017.03.09:

Ôö¼ÓB34/39_DRX¶Ë¿Ú£¬ÐÞ¸ÄB5_DRX¶Ë¿Ú

COMPANY:	HQ		
TITLE:	D52_MB_SCH_V1.0_161110		
DRAWN: Jimmy(BB), Yue Peng(RF)	DATED: 2016/10/06	CODE:	SIZE: D
CHECKED: Yang Junli(BB),Zhang Ruofeng(RF)	DATED: 2016/10/10	DRAWING NO:	REV: V1.0
QUALITY CONTROL:	DATED:		
RELEASED:	DATED:	SCALE:	SHEET: 30 OF 38

REVISION RECORD			
LTR	ECO NO:	APPROVED:	DATE:

31: DRX_HB

2017.03.09:
É¾È¥ C3108 & C3111ÒÔ¼°SW3101¼æÈÝµçÂ·¡£

B7/B41C

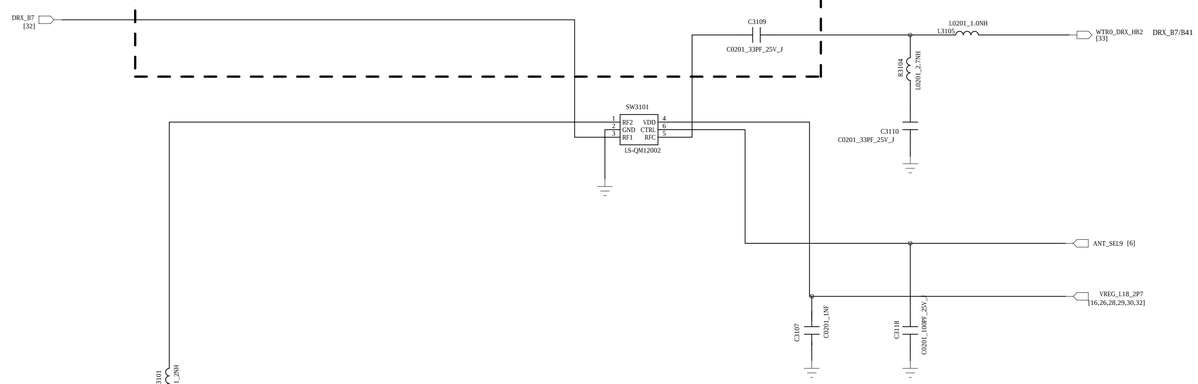

DRX_B38/41B(2545~2655)

change to SAFFB2G60MA0F0A

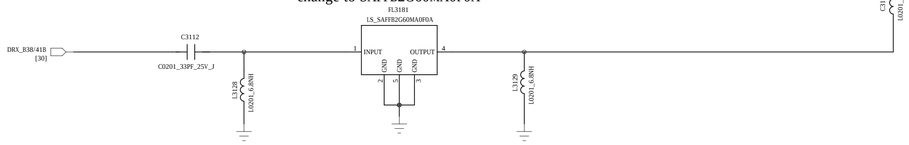

DRX_B40(China&EMEA)

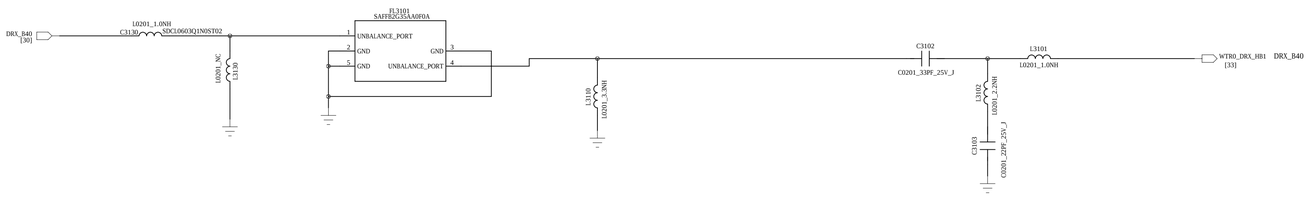

COMPANY: HQ			
TITLE: D52_MB_SCH_V1.0_161110			
DRAWN: Jimmy(BB), Yue Peng(RF)	DATED: 2016/10/06		
CHECKED: Yang Junli(BB),Zhang Ruofeng(RF)	DATED: 2016/10/10		
QUALITY CONTROL:	DATED:		
RELEASED:	DATED:		
CODE:	SIZE: D	DRAWING NO:	REV: V1.0
SCALE:		SHEET: 31 OF 38	

REVISION RECORD			
LTR	ECO NO:	APPROVED:	DATE:

32: DRX_LB_MB

B5

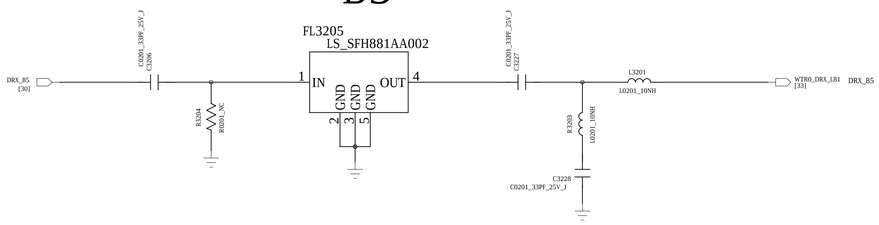

B8

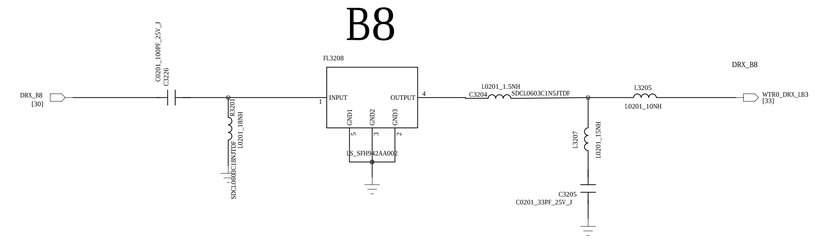

DRX_B1/2/4

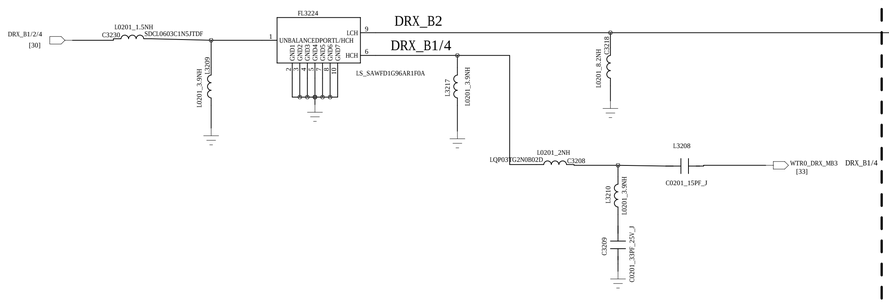

B34/39

2017.03.09:

1.Ôö¼ÓB34/39 dual_SAWºÍSPDT¿ª¹ØSW3223.

2.ÐÞ¸ÄB2/3_DRX¶Ë¿Ú;

3.É¾³ýB12/13/17/20/28Ïà¹Ø£÷¼þ¡£

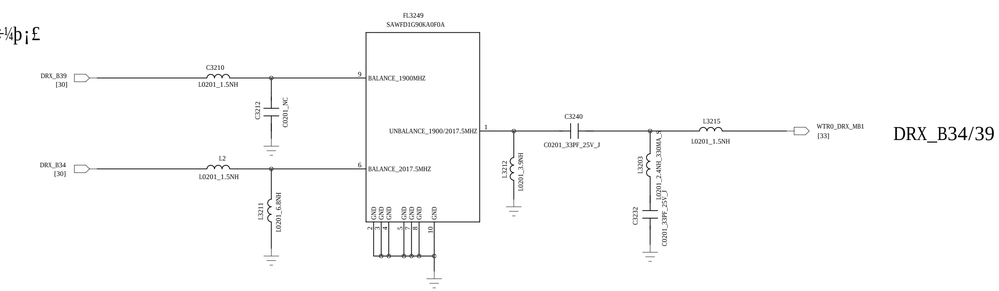

2017.03.09:

¸ü»»Îª¾µÏñÁÏ£ºHQ11430305000 SAWFD1G84AH1F0A

DRX_B3/7

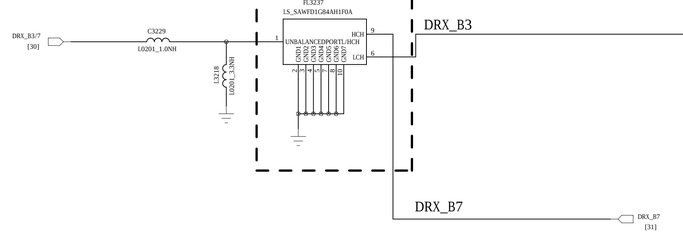

SW3101	PATH	GPIO_111
DRX_B2	RFC-RF1	Low
DRX_B3	RFC-RF2	High

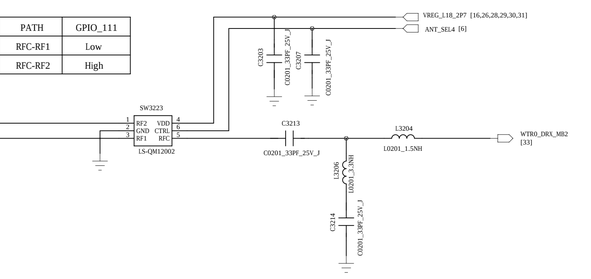

DRAWN: Jimmy(BB), Yue Peng(RF)	DATED: 2016/10/06	COMPANY: HQ	
		TITLE: D52_MB_SCH_V1.0_161110	
CHECKED: Yang Junli(BB),Zhang Ruofeng(RF)	DATED: 2016/10/10	CODE:	SIZE: D / DRAWING NO: / REV: V1.0
QUALITY CONTROL:	DATED:		
RELEASED:	DATED:	SCALE:	SHEET: 32 OF 38

REVISION RECORD			
LTR	ECO NO:	APPROVED:	DATE:

33: WTR2965 0#

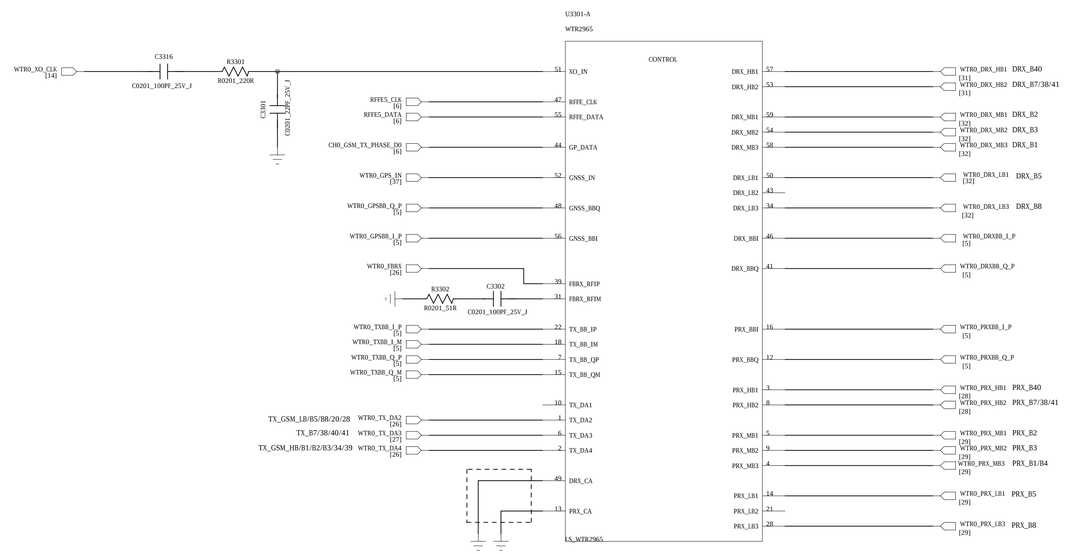

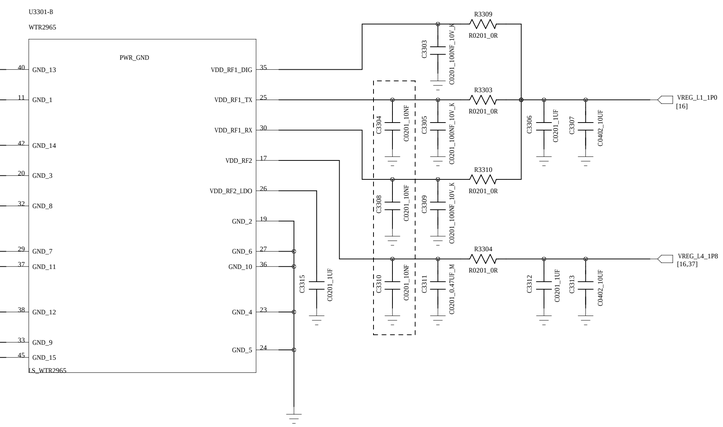

DRAWN: Jimmy(BB), Yue Peng(RF)	DATED: 2016/10/06	COMPANY: HQ	
CHECKED: Yang Junli(BB),Zhang Ruofeng(RF)	DATED: 2016/10/10	TITLE: D52_MB_SCH_V1.0_161110	
QUALITY CONTROL:	DATED:	CODE:	SIZE: D / DRAWING NO: / REV: V1.0
RELEASED:	DATED:	SCALE:	SHEET: 33 OF 38

REVISION RECORD			
LTR	ECO NO:	APPROVED:	DATE:

DRAWN: Jimmy(BB), Yue Peng(RF)	DATED: 2016/10/06
CHECKED: Yang Junli(BB),Zhang Ruofeng(RF)	DATED: 2016/10/10
QUALITY CONTROL:	DATED:
RELEASED:	DATED:

COMPANY: HQ

TITLE: D52_MB_SCH_V1.0_161110

CODE:	SIZE:	DRAWING NO:	REV:
	D		V1.0

SCALE:

SHEET: 34 OF 38

REVISION RECORD			
LTR	ECO NO:	APPROVED:	DATE:

35: QFE2101

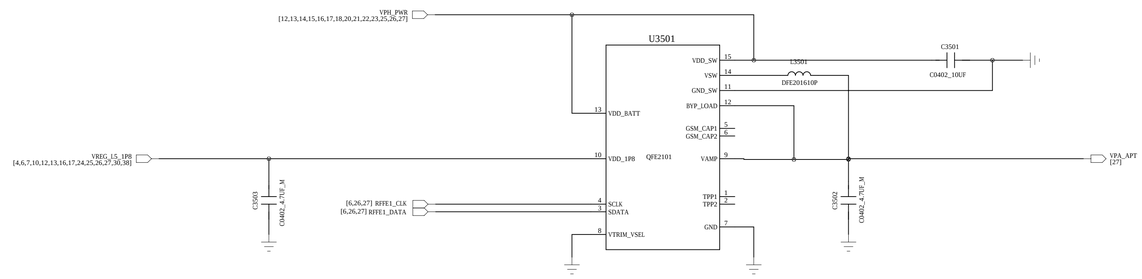

COMPANY: HQ			
TITLE: D52_MB_SCH_V1.0_161110			
DRAWN: Jimmy(BB), Yue Peng(RF)	DATED: 2016/10/06		
CHECKED: Yang Junli(BB),Zhang Ruofeng(RF)	DATED: 2016/10/10	CODE:	SIZE: D
QUALITY CONTROL:	DATED:	DRAWING NO:	REV: V1.0
RELEASED:	DATED:	SCALE:	SHEET: 35 OF 38

REVISION RECORD			
LTR	ECO NO:	APPROVED:	DATE:

36£ºWIFI_2.4G_5G

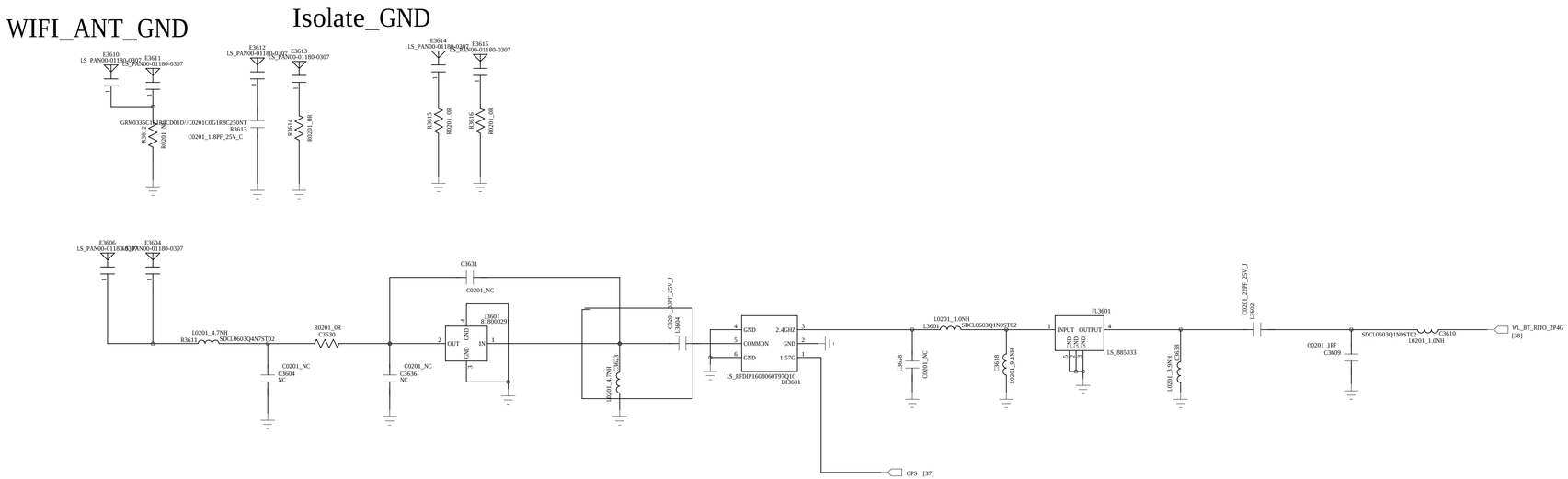

COMPANY: HQ			
TITLE: D52_MB_SCH_V1.0_161110			
DRAWN: Jimmy(BB), Yue Peng(RF)	DATED: 2016/10/06	CODE:	SIZE: D
CHECKED: Yang Junli(BB),Zhang Ruofeng(RF)	DATED: 2016/10/10	DRAWING NO:	REV: V1.0
QUALITY CONTROL:	DATED:		
RELEASED:	DATED:	SCALE:	SHEET: 36 OF 38

REVISION RECORD			
LTR	ECO NO:	APPROVED:	DATE:

37: GPS

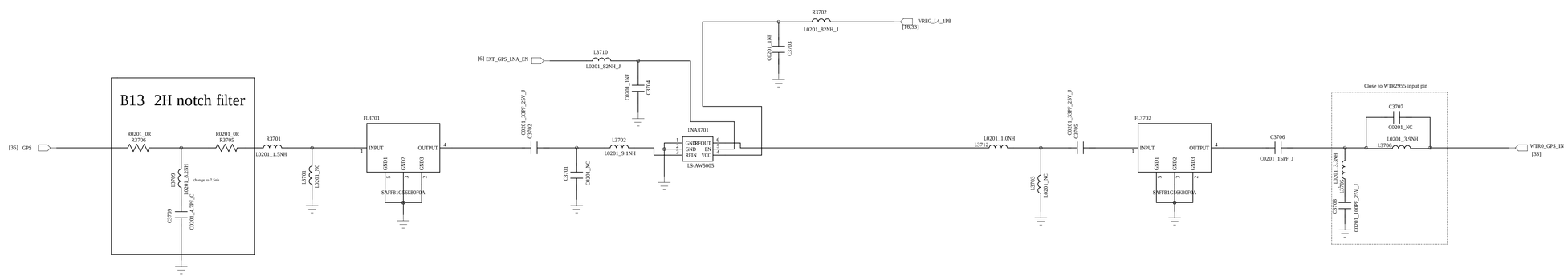

DRAWN: Jimmy(BB), Yue Peng(RF)	DATED: 2016/10/06	COMPANY: HQ	
CHECKED: Yang Junli(BB),Zhang Ruofeng(RF)	DATED: 2016/10/10	TITLE: D52_MB_SCH_V1.0_161110	
QUALITY CONTROL:	DATED:	CODE:	SIZE: D / DRAWING NO: / REV: V1.0
RELEASED:	DATED:	SCALE:	SHEET: 37 OF 38

REVISION RECORD			
LTR	ECO NO:	APPROVED:	DATE:

38£ºWCN3660B

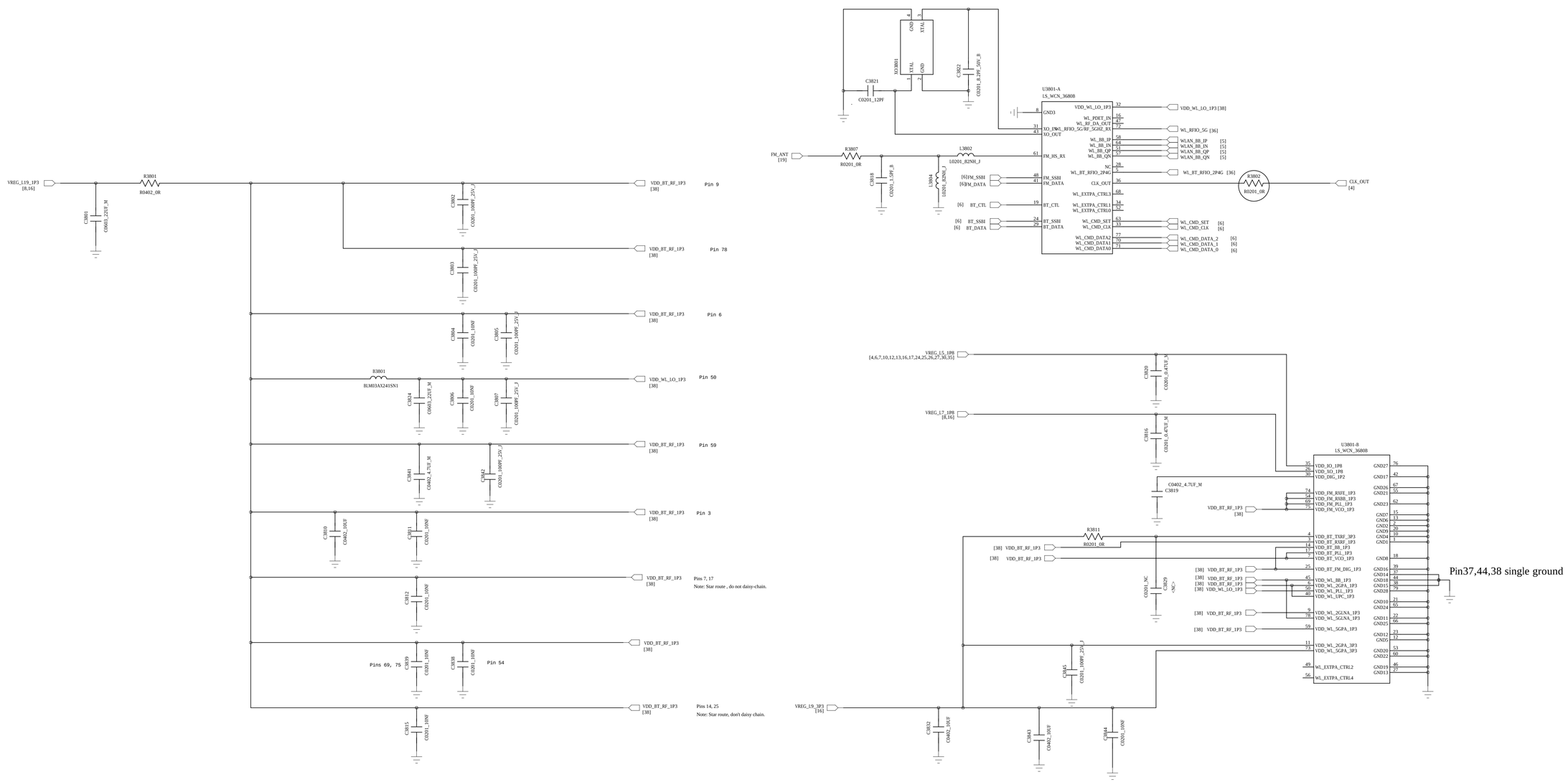

DRAWN: Jimmy(BB), Yue Peng(RF)	DATED: 2016/10/06
CHECKED: Yang Junli(BB),Zhang Ruofeng(RF)	DATED: 2016/10/10
QUALITY CONTROL:	DATED:
RELEASED:	DATED:

COMPANY: HQ			
TITLE: D52_MB_SCH_V1.0_161110			
CODE:	SIZE: D	DRAWING NO:	REV: V1.0
SCALE:		SHEET: 38 OF 38	